# CATALOGUE

## ROTAX Plus POLE SCAFFOLDING

ALTRAD Mostostal

**ROTAX Plus pole scaffolding**
1. Introduction ..... 4
2. Application ..... 5
3. Example of a ROTAX Plus set ..... 5

**Pole scaffolding - ROTAX Plus, general and technical information**
4. ROTAX - loads ..... 6
5. Transom effective load capacity ..... 7

**Pole scaffolding -ROTAX Plus - components**
6. List of ROTAX components ..... 8

**Pole scaffolding - STANDS - components**
7. List of STAND components ..... 33

**Pole scaffolding - STANDS - examples of sets**
8. Altrad Event stand - complete with stage platforms ..... 41
9. Altrad Event stand - complete with steel platforms ..... 43

**Pole scaffolding - ROTAX Plus - additional tables**
10. Girder effective load capacity ..... 44
11. Connector effective loads ..... 45
12. Platform loads ..... 45
13. Permissible span for moveable platforms made of wood or planks ..... 46
14. Transoms complete with perforated platforms ..... 46
15. Adjustable base jack load capacity ..... 47

**Pole scaffolding - ROTAX plus - gate passages**
16. Gate passages ..... 47

**Pole scaffolding - ROTAX Plus - aluminium platforms**
17. Aluminium platforms ..... 48

**Pole scaffolding - ROTAX Plus - examples of mobile scaffolding**
18. Wall mobile scaffolding - ROTAX Plus system ..... 50
19. Ceiling mobile scaffolding - ROTAX Plus system ..... 51

**Pole scaffolding - ROTAX Plus - staircases**
20. Free-standing staircase - ROTAX Plus system ..... 52
21. Free-standing staircase with load-bearing beam - ROTAX Plus system ..... 53
22. Staircase at scaffolding - ROTAX Plus system ..... 54

Scaffolding commission protocol ..... 55
Partner network ..... 56

## 1. Introduction

The next issue of the ROTAX Plus POLE SCAFFOLDING catalogue presents a number of new solutions implemented into the manufacturing programme over the past four years.

A stand system partially based on typical ROTAX Plus system components is our new offering.

The whole line of existing components also includes very practical modifications.

We have also proposed a new, simplified and more intuitive catalogue layout to facilitate the use of its content.

This issue is supplemented with new figures which show the application of individual ROTAX Plus system components so that it is more readable.

Finally, it is expanded with additional and usable tables to facilitate the selection of appropriate system components for your scaffolding structures to make optimum technical and economical designs.

New solutions include a new console, new transom solutions, stairs beams - used to erect staircases based on typical steel platforms.

- ROTAX Plus - always modern, innovative and economical solutions.
- ROTAX Plus - logical and fast scaffolding assembly system.
- ROTAX Plus - construction site safety guaranteed.

*Radom Cathedral*

## 2. Application

ROTAX Plus system scaffolding is used as:
- spatial structures;
- scaffolding of irregular shape;
- platforms for working at height;
- supporting (load-bearing) structures - supporting towers;
- mobile scaffolding;
- suspended scaffolding;
- facade scaffolding.

Moreover, basing on the ROTAX scaffolding you can erect external staircases to form circulation paths between the levels. Single and double staircases are available. The staircases are free-standing structures (anchored to a building) or installed at the scaffolding (permanently fixed to it).
External staircases are typically installed in the 3.07 m or 2.57 m bay. They are constructed of serial system components and expanded only with aluminium stairs, internal and external railings.
Staircases facilitate access to the appropriate building level where the formwork is installed, concrete is laid or other construction works are performed. You can assemble the ROTAX Plus scaffolding as mobile structures where the given platform will be fitted with the guide beam and road wheels. This solution is particularly desirable during the construction, assembly and inspection works where erecting the scaffolding for a longer time is not possible or required.
The ROTAX Plus system adapts optimally to facilities or atypical and irregular shapes due to e.g. steel and aluminium girders which allow you to:
- suspend platforms especially when constructing platforms (girder with the U-section);
- construct passages under the scaffolding, spans over structural building parts.

## 3. Example of a ROTAX Plus set

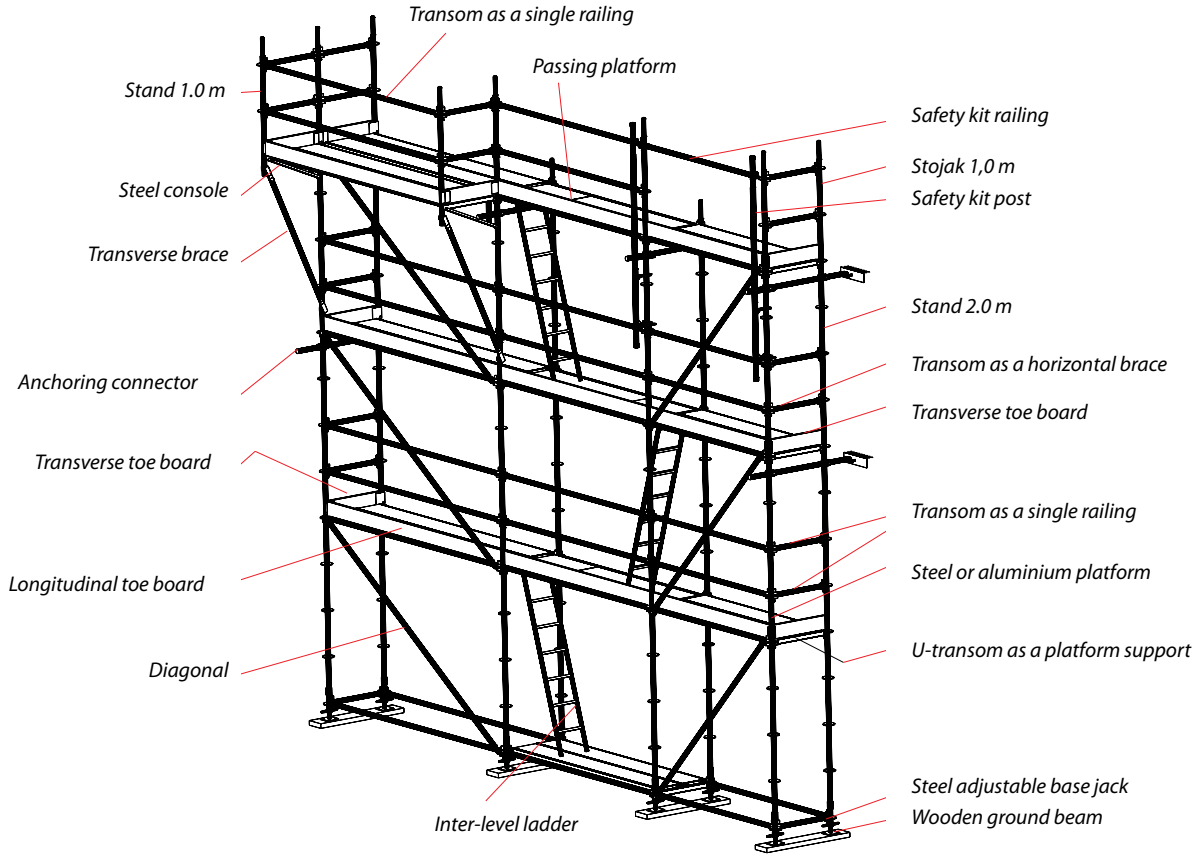

## 4. Loads

**Table 1. Maximum loads for stands of spatial scaffolding structures.**

| Edge (external) stands | | | | | | | | | | | | |
|---|---|---|---|---|---|---|---|---|---|---|---|---|
| **Bay length [m].** | **0.73** | | **1.09** | | **1.57** | | **2.07** | | **2.57** | | **3,07** | |
| Bracing method. | X | Y | X | Y | X | Y | X | Y | X | Y | X | Y |
| Permissible vertical load [kN]. | 34.1 | 29.3 | 41.0 | 38.7 | 40.1 | 39.2 | 39.5 | 39.3 | 38.5 | 38.2 | 38.0 | 37.5 |

| Central (internal) stands | | | | | | | | | | | | |
|---|---|---|---|---|---|---|---|---|---|---|---|---|
| **Bay length [m].** | **0.73** | | **1.09** | | **1.57** | | **2.07** | | **2.57** | | **3.07** | |
| Bracing method. | X | Y | X | Y | X | Y | X | Y | X | Y | X | Y |
| Permissible vertical load [kN]. | 34.1 | 29.3 | 43.0 | 38.7 | 45.0 | 43.0 | 45.2 | 43.3 | 44.5 | 43.2 | 43.2 | 40.5 |

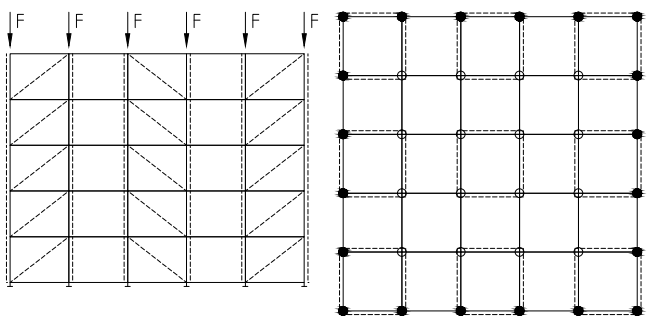


X vertical brace position:
- one brace per every other bay

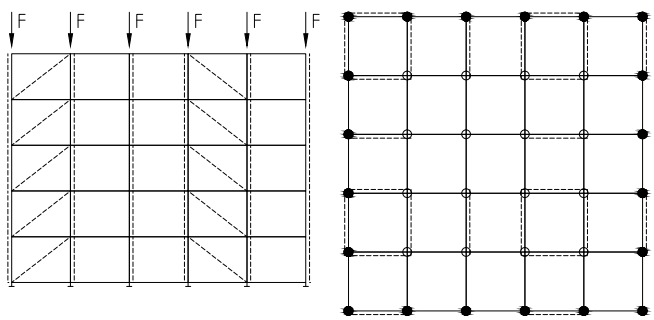


Y vertical brace position:
- one brace per every third bay

● - internal stand
○ - external stand

**Table 2. Permissible ROTAX Plus node loads**

| Load type | Permissible value |
|---|---|
| Bending moment $M_{y,r,d}$ (kN/cm) | +/-94 |
| Vertical transverse force $V_{z,r,d}$ (kN) | +/-29.3 |
| Bending moment $M_{z,r,d}$ (kN/cm) | +/-21.8 |
| Horizontal transverse force $V_{y,r,d}$ (kN) | +/-9.27 |
| Torque moment $M_{t,r,d}$ (kN/cm) | +/-50.2 |
| Normal force $N_{r,d}$ (kN) | +/-29.2 |

## 5. Transom effective load capacity

### Table 3. Transom effective load capacity

| Component name | Length [m] | Index | Load concen-trated (P) in the middle of a bay [kN] | Sectional (q) load, equally distributed [kN/m] |
|---|---|---|---|---|
| O-transom | 0.42 | E371804 | 14.9 | 84.0 |
| O-transom | 0.73 | E371807 | 7.29 | 19.9 |
| O-transom | 1.09 | E371810 | 5.76 | 6.0 |
| O-transom | 1.4 | E371814 | 4.58 | 4.9 |
| O-transom | 1.57 | E371815 | 2.95 | 2.53 |
| O-transom | 2.07 | E371820 | 2.24 | 1.44 |
| O-transom | 2.57 | E371825 | 1.8 | 0.7 |
| O-transom | 3.07 | E371830 | 1.51 | 0.65 |
| U-transom | 0.42 | E372404 | 16.1 | 60.2 |
| U-transom | 0.73 | E372407 | 9.1 | 16.65 |
| O-transom, reinforced | 1.09 | E372210 | 8.96 | 10.9 |
| U-transom, reinforced | 1.09 | E372410 | 11.18 | 13.7 |
| U-transom, reinforced | 1.4 | E372414 | 8.7 | 8.28 |
| U-transom, reinforced | 1.57 | E372415 | 7.74 | 6.53 |
| O-transom, double | 1.57 | E373615 | 12.52 | 15.9 |
| O-rygiel podwójny | 2.07 | E373620 | 9.51 | 9.17 |
| O-transom, double | 2.57 | E373625 | 7.6 | 5.95 |
| O-transom, double | 3.07 | E373630 | 6.4 | 4.17 |
| U-transom, double | 1.57 | E373515 | 12.6 | 16.12 |
| U-transom, double | 2.07 | E373520 | 9.6 | 9.28 |
| U-transom, double | 2.57 | E373525 | 7.7 | 6.0 |
| U-transom, double | 3.07 | E373530 | 6.4 | 4.22 |
| Girder, ROTAX | 0.5x2.57 | E376725 | 15.5* | – |
| Girder, ROTAX | 0.5x3.07 | E376830 | 11.5* | – |
| Girder, ROTAX | 0.5x2.57 | E376725 | 27.5** | 13.5 # |
| Dźwigar ROTAX | 0.5x3.07 | E376830 | 21.5** | 11.0 # |
| Girder, ROTAX | 0.5x4.14 | E376841 | 17.3** | 7.7 # |
| Girder, ROTAX | 0.5x5.14 | E376851 | 15.5** | 5.3 # |
| Girder, ROTAX | 0.5x6.14 | E376861 | 10.8** | 4.25 # |

* Girder not stabilised transversely on the upper belt
** Girder stabilised transversely in the middle of the upper belt length
\# Girder stabilised transversely with typical platforms installed over the entire upper belt length

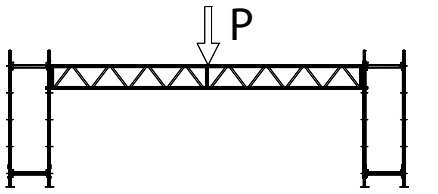

Concentrated load

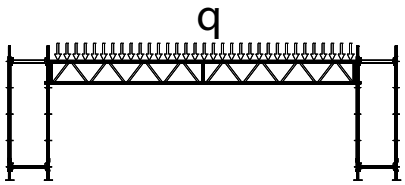

Continuous load

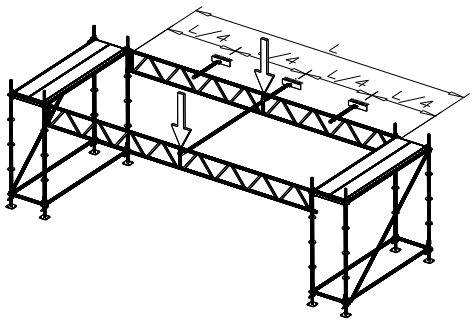

Upper belt stabilisation

## 6. List of ROTAX components

### 1. Initial component

Used to level the lowest scaffolding level and place the vertical stands. Fitted with the hole disk to attach the horizontal transoms. Can be used to expand the scaffolding.

| Index | Dimensions (m) | Weight (kg) |
|---|---|---|
| E371300 | 0.23 | 1.59 |
| E371302 | 0.43 | 2.50 |

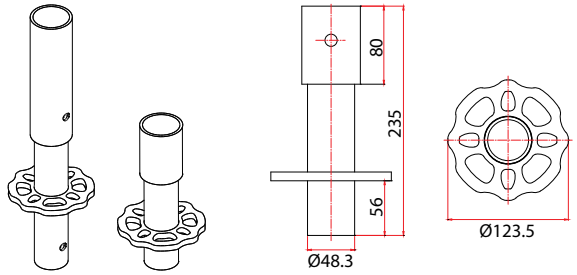


### 2. Stand

Basic load-bearing scaffolding component. Made of a pipe ø 48.3. Fitted with the disks installed every 0.5 m over the entire length to attach up to 8 connectors such as: transoms, braces.

| Index | Dimensions (m) | Weight (kg) |
|---|---|---|
| E371405 | 0.5 | 3.18 |
| E371410 | 1.0 | 5.45 |
| E371415 | 1.5 | 7.72 |
| E371420 | 2.0 | 10.0 |
| E371425 | 2.5 | 12.2 |
| E371430 | 3.0 | 14.54 |
| E371435 | 3.5 | 16.78 |
| E371440 | 4.0 | 19.0 |

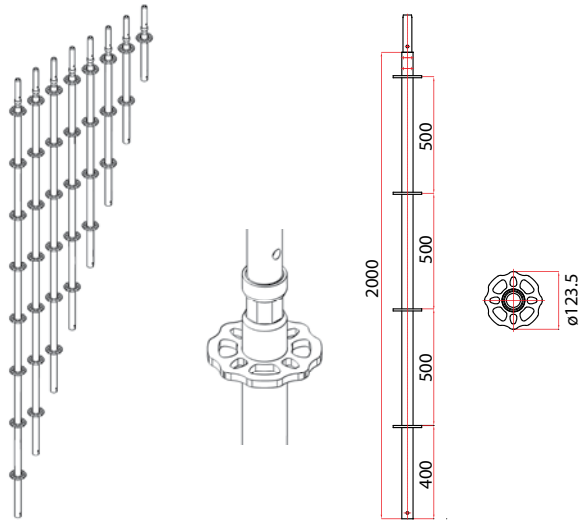


### 3. Stand without a pin connector

Used in the stage and platform structures (last level).

| Index | Dimensions (m) | Weight (kg) |
|---|---|---|
| E371505 | 0.5 | 2.27 |
| E371510 | 1.0 | 4.54 |
| E371515 | 1.5 | 6.81 |
| E371520 | 2.0 | 9.07 |
| E371525 | 2.5 | 11.3 |
| E371530 | 3.0 | 13.6 |
| E371540 | 4.0 | 18.15 |

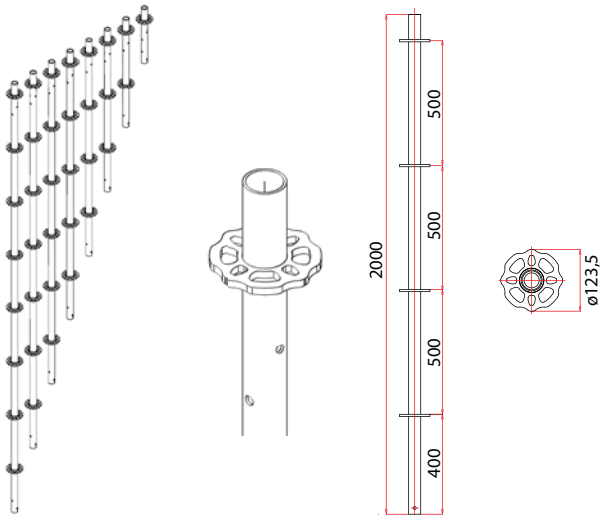

## 4. Pin connector

Used to connect the stands without a pin connector. Works with the M12 screw and nut.

| Index | Dimensions (m) | Weight (kg) |
|---|---|---|
| E371600 | 0.52 | 1.77 |

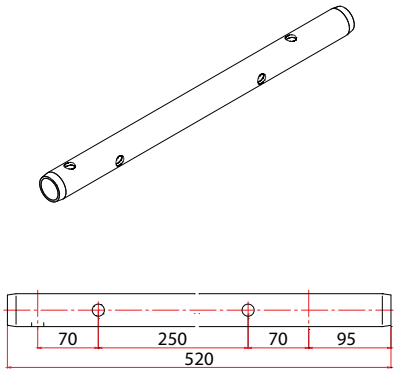


## 5. Screw M12 x 60 with nut

Connecting element.

| Index | Dimensions (m) | Weight (kg) |
|---|---|---|
| SRUX26000 | 12x60 | 0.04 |
| NAK120000 | - | 0.01 |

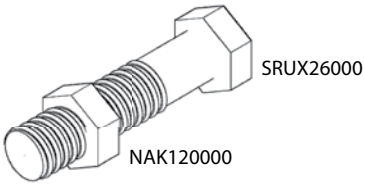


## 6. Stand with screwed connector

Used to erect suspended and supporting scaffolding. The screws allow you to connect the scaffolding.

| Index | Dimensions (m) | Weight (kg) |
|---|---|---|
| E 371605 | 0.55 | 4.43 |
| E371610 | 1.0 | 6.71 |
| E371615 | 1.5 | 8.98 |
| E371620 | 2.0 | 11.2 |
| E371625 | 2.5 | 13.5 |
| E371630 | 3.0 | 15.7 |
| E371635 | 3.5 | 18.0 |
| E 371640 | 4.0 | 20.3 |

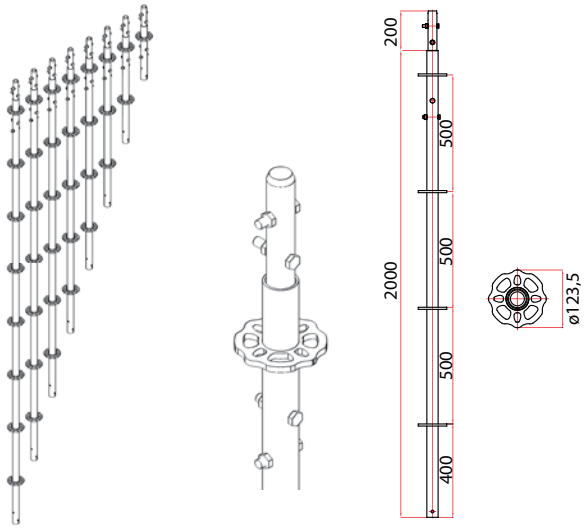


## 7. Disk Connector

Allows you to build an additional system node on the ROTAX system stands in any position. You can attach up to 6 additional parts such as: a transom, brace or console to the disk connector.

| Index | Dimensions (m) | Weight (kg) |
|---|---|---|
| E371200 | - | 1.15 |

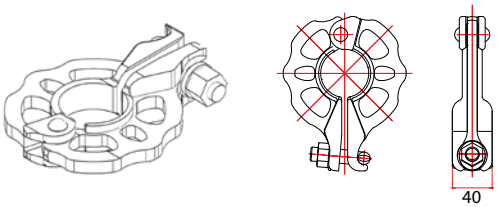


see p. 45

## 8. Horizontal Transom

Stiffens the scaffolding structure, used as protection railings.

| Index | Dimensions (m) | Weight (kg) |
|---|---|---|
| E371804 | 0.39 | 2.12 |
| E371807 | 0.73 | 3.41 |
| E371810 | 1.09 | 4.7 |
| E371814 | 1.40 | 5.94 |
| E371815 | 1.57 | 5.8 |
| E371820 | 2.07 | 7.8 |
| E371825 | 2.57 | 9.07 |
| E371830 | 3.07 | 10.1 |

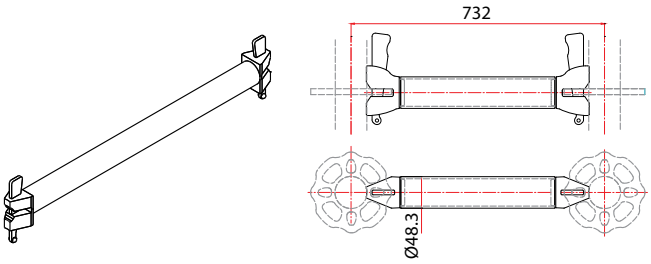


see p. 7

## 9. Transverse U-transom

A U-transom to suspend platforms with the u-section catch.

| Index | Dimensions (m) | Weight (kg) |
|---|---|---|
| E372404 | 0.45 | 2.22 |
| E372407 | 0.73 | 3.16 |

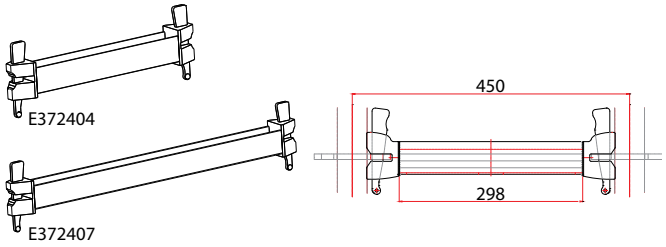


see p. 7

## 10. Reinforced U-transom

A reinforced U-transom is used to suspend platforms with the u-section catch.

| Index | Dimensions (m) | Weight (kg) |
|---|---|---|
| E372410 | 1.09 | 6.21 |
| E372414* | 1.4 | 7.94 |

* made to order

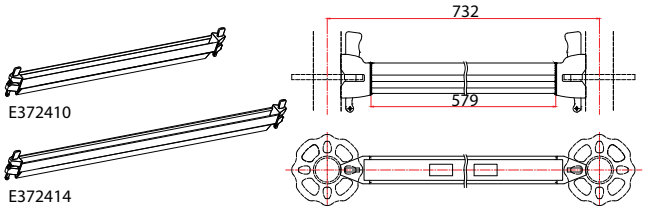


see p. 7

## 11. Double U-transom

A transom with the U-section, adequately reinforced to install the platforms with the higher stand spacing. Used when building platforms.

| Index | Dimensions (m) | Weight (kg) |
|---|---|---|
| E373515 | 1.57 | 9.75 |
| E373520 | 2.07 | 12.8 |
| E373525 | 2.57 | 15.9 |
| E373530 | 3.07 | 18.9 |

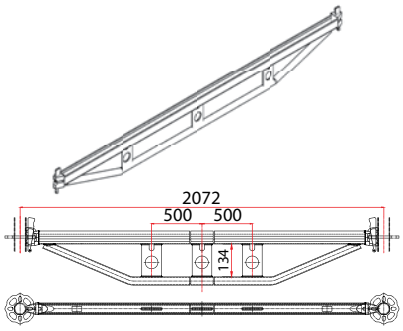


see p. 7

## 12. Platform Protection

Protects the platform from falling out of the U-transom.

| Index | Dimensions (m) | Weight (kg) |
|---|---|---|
| E374503 | 0.36 | 0.61 |
| E374507 | 0.73 | 1.33 |
| E374510 | 1.09 | 1.96 |
| E374514 | 1.40 | 2.74 |
| E374515 | 1.57 | 3.0 |
| E374520 | 2.07 | 4.0 |
| E374525 | 2.57 | 4.93 |
| E 374530 | 3.07 | 5.87 |

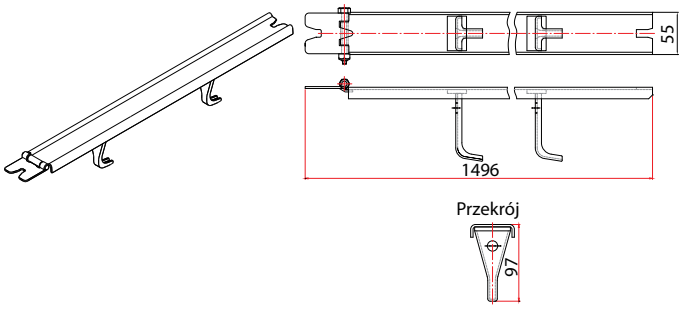


see p. 7

## 13. Reinforced O-transom

Reinforced transoms are used to suspend platforms with the O-section catch.

| Index | Dimensions (m) | Weight (kg)) |
|---|---|---|
| E372210 | 1.09 | 6.46 |

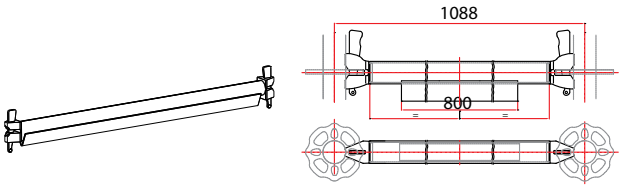


see p. 7

## 14. Double O-transom

A transom with the O-section, adequately reinforced to install the platforms with the higher stand spacing. Used when building platforms.

| Index | Dimensions (m) | Weight (kg) |
|---|---|---|
| E373615 | 1.57 | 10.1 |
| E373620 | 2.07 | 13.3 |
| E373625 | 2.57 | 16.5 |
| E373630 | 3.07 | 19.7 |

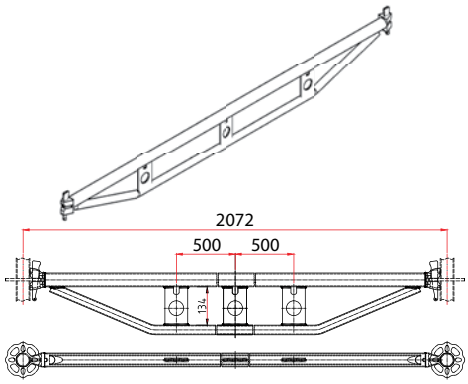


see p. 7

*Works at the airport building facade*

## 15. Vertical Brace

Fitted on both ends with moving heads with a fixed wedge driven into the disk hole. Provided for different scaffolding bay length. Stiffens the scaffolding structure.

| Index | Dimensions (m) | Weight (kg) |
|---|---|---|
| E373107 | 0.73x2.0 | 7.88 |
| E373110 | 1.09x2.0 | 8.26 |
| E373114 | 1.40x2.0 | 8.69 |
| E373115 | 1.57x2.0 | 8.97 |
| E373120 | 2.07x2.0 | 9.92 |
| E373125 | 2.57x2.0 | 10.99 |
| E373130 | 3.07x2.0 | 12.1 |
| E373207 | 0.73x1.0 | 5.15 |
| E373215 | 1.57x1.0 | 6.86 |
| E373220 | 2.07x1.0 | 8.12 |
| E373221 | 2.07x0.5 | 7.59 |
| E373225 | 2.57x1.0 | 9.46 |
| E373230 | 3.07x1.0 | 10.83 |

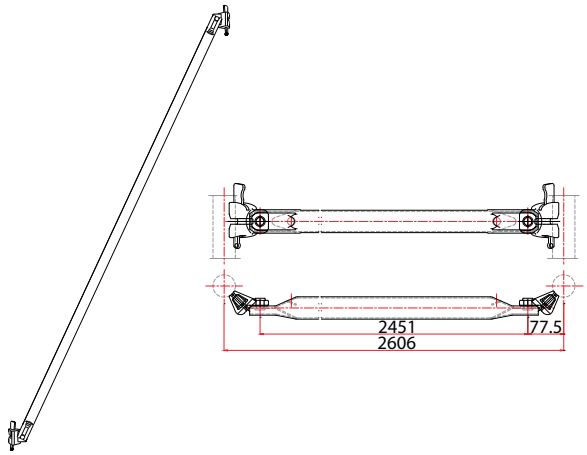


## 16. Horizontal Brace

Stiffens the scaffolding horizontally, in the bays with no platform installed and with platform planks.

| Index | Dimensions (m) | Weight (kg) |
|---|---|---|
| E373320 | 2.07x1.09 | 6.53 |
| E373325 | 2.57x1.09 | 7.75 |
| E373330 | 3.07x1.09 | 10.8 |
| E373410 | 2.09x1.09 | 4.2 |
| E373425 | 2.57x0.73 | 7.45 |
| E373430 | 3.07x0.73 | 8.75 |

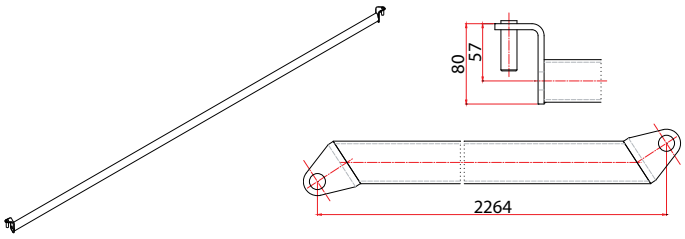


## 17. Steel U - platform

A perforated platform with the anti-slip surface and the U-section handles. A standard platform for scaffolding with the frame 0.73 m wide (2 platforms) or 1.09 m wide (3 platforms) and an expanding platforms, installed on the console

| Index | Dimensions (m) | Weight (kg) |
|---|---|---|
| E491307 | 0.32x0.73 | 5.89 |
| E491310 | 0.32x1.09 | 8.19 |
| E491314 | 0.32x1.40 | 10.31 |
| E491315 | 0.32x1.57 | 11.31 |
| E491320 | 0.32x2.07 | 14.55 |
| E491325 | 0.32x2.57 | 17.77 |
| E491330 | 0.32x3.07 | 21.0 |

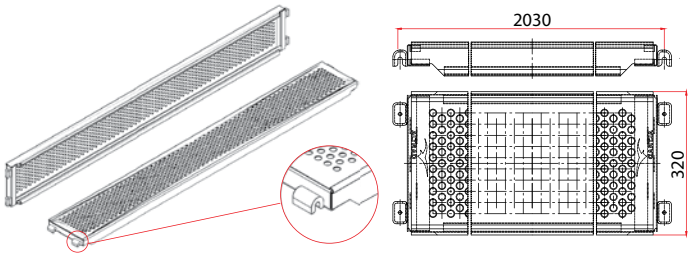


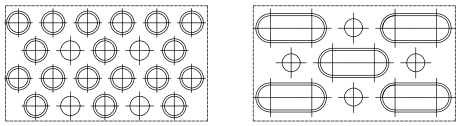

*Typy perforacji*

see p. 45

## 18. Steel Platform with cross-beam

A steel perforated platform with ergonomic cross-beams which are the additional handle for the fitter. Perfect when the scaffolding is often relocated.

| Index | Dimensions (m) | Weight (kg) |
|---|---|---|
| E491415 | 0.32x1.57 | 11.78 |
| E491420 | 0.32x2.07 | 15.28 |
| E491425 | 0.32x2.57 | 18.57 |
| E491430 | 0.32x3.07 | 21.88 |

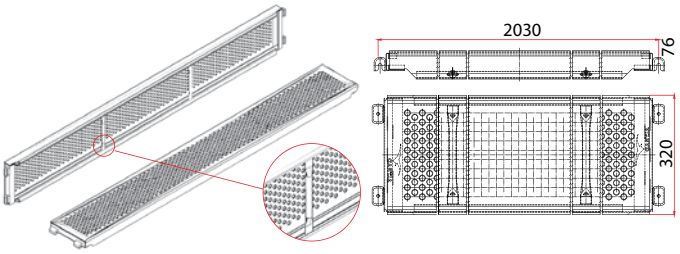


see p. 45

## 19. Steel ECO platform with cross-beam

A light perforated platform with the anti-slip surface and the U-section handles. ECO platforms are lighter and cheaper than the conventional steel platforms and they maintain the same strength characteristics.

| Index | Dimensions (m) | Weight (kg) |
|---|---|---|
| E491625 | 0.32x2.57 | 16.15 |
| E491630 | 0.32x3.07 | 18.85 |

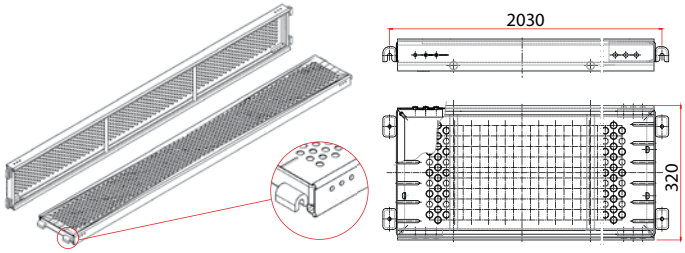


see p. 45

## 20. Steel O-platform

A perforated, anti-slip platform finished with the handles to install the platform on the O-transom.

| Index | Dimensions (m) | Weight (kg) |
|---|---|---|
| E495607 | 0.32x0.73 | 6.52 |
| E495610 | 0.32x1.09 | 8.82 |
| E495614 | 0.32x1.40 | 11.19 |
| E495615 | 0.32x1.57 | 11.94 |
| E495620 | 0.32x2.07 | 15.17 |
| E495625 | 0.32x2.57 | 18.40 |
| E495630 | 0.32x3.07 | 21.63 |

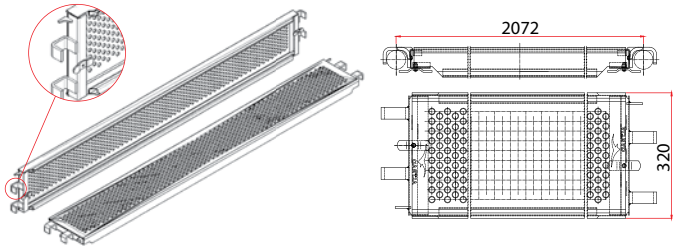


see p. 45

## 21. Steel O-platform with cross-beam

A perforated, anti-slip platform finished with the handles to install the platform on the O-transom, Ergonomic cross-beams facilitate installation.

| Index | Dimensions (m) | Weight (kg) |
|---|---|---|
| E495507 | 0.32x0.73 | 6.72 |
| E495510 | 0.32x1.09 | 9.02 |
| E495515 | 0.32x1.57 | 12.14 |
| E495520 | 0.32x2.07 | 15.58 |
| E495525 | 0.32x2.57 | 18.81 |
| E495530 | 0.32x3.07 | 22.03 |

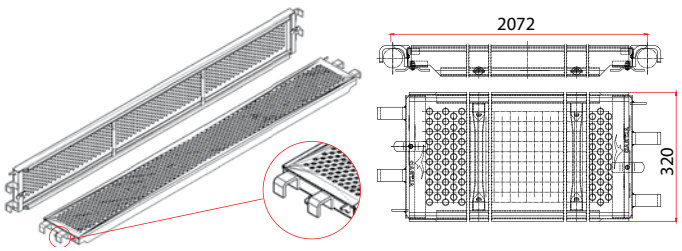


see p. 45

## 22. Steel intermediate U-platform

A platform with the U-section catch, perforated, anti-slip.

| Index | Dimensions (m) | Weight (kg) |
|---|---|---|
| E491807 | 0.19x0.73 | 4.47 |
| E491810 | 0.19x1.09 | 6.31 |
| E491815 | 0.19x1.57 | 8.80 |
| E491820 | 0.19x2.07 | 11.38 |
| E491825 | 0.19x2.57 | 13.96 |
| E491830 | 0.19x3.07 | 16.54 |

* made to order

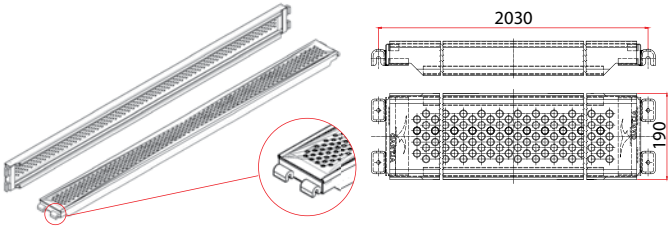


see p. 45

## 23. Steel intermediate O-platform

A platform with the O-section catch, perforated, anti-slip.

| Index | Dimensions (m) | Weight (kg) |
|---|---|---|
| E491707 | 0.19x0.73 | 5.05 |
| E491710 | 0.19x1.09 | 6.74 |
| E491715 | 0.19x1.57 | 9.23 |
| E491720 | 0.19x2.07 | 11.81 |
| E491725 | 0.19x2.57 | 14.39 |
| E491730 | 0.19x3.07 | 16.97 |

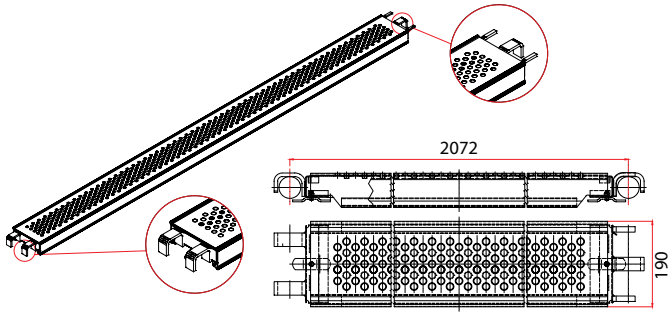


## 24. Complete aluminium and plywood Platform PLUS

An aluminium and plywood platform with the anti-slip surface.

| Index | Dimensions (m) | Weight (kg) |
|---|---|---|
| E491907 | 0.61x0.73 | 6.07 |
| E491910 | 0.61x1.09 | 8.75 |
| E491915 | 0.61x1.57 | 11.90 |
| E491920 | 0.61x2.07 | 15.53 |
| E491925 | 0.61x2.57 | 18.8 |
| E491930 | 0.61x3.07 | 24.06 |

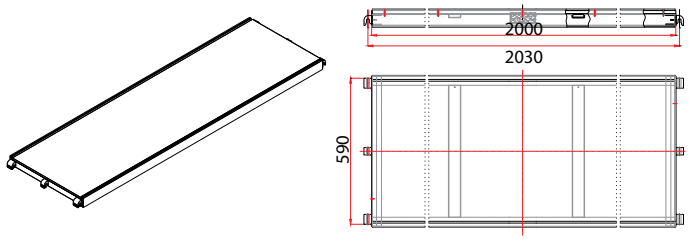


see p. 45

*Zakłady Azotowe in Puławy*

## 25. Ladder for platforms

A replacement aluminium ladder for the aluminium platform with the hatch (E4923xx) complete with the pin and the washer. Ladder no. E492600 also matches the platforms

| Index | Dimensions (m) | Weight (kg) |
|---|---|---|
| E492601 | 2.45x.,40 | 4.60 |

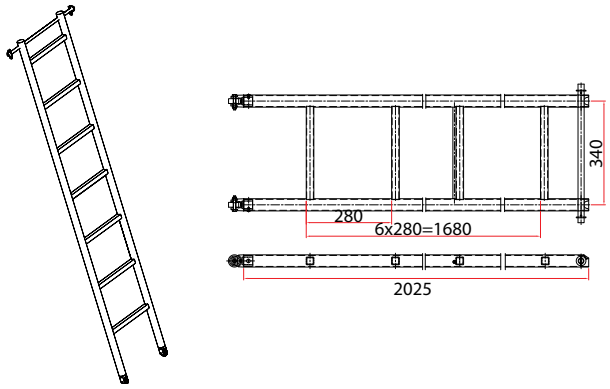


## 26. Aluminium Ladder for passing platforms

A service component, does not include any pin or washer.

| Index | Dimensions (m) | Weight (kg) |
|---|---|---|
| E492600 | 2.45x0.40 | 4.25 |

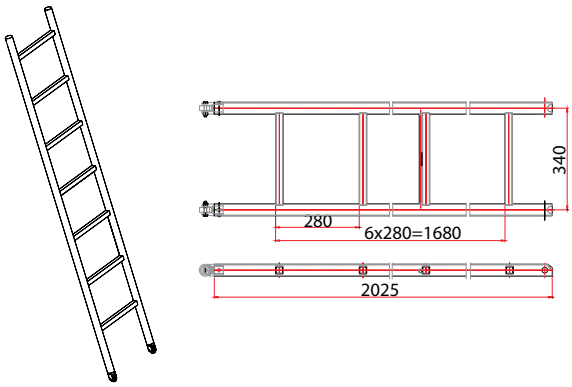


## 27. Pin

Fastens the ladder to the platform aluminium frame. A service component.

| Index | Dimensions (m) | Weight (kg) |
|---|---|---|
| E492603 | - | 0.33 |

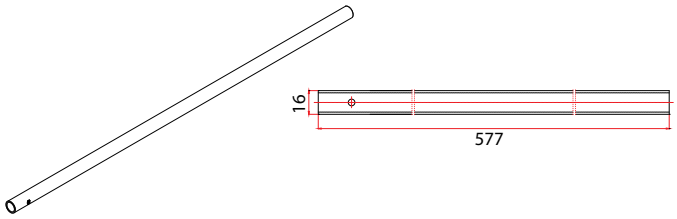


## 28. Steel inter-level Ladder

A ladder with the metal sheet steps with the anti-slip perforation. Used with platforms no. E4925xx.

| Index | Dimensions (m) | Weight (kg) |
|---|---|---|
| E511600 | 2.14x0.34 | 11.68 |

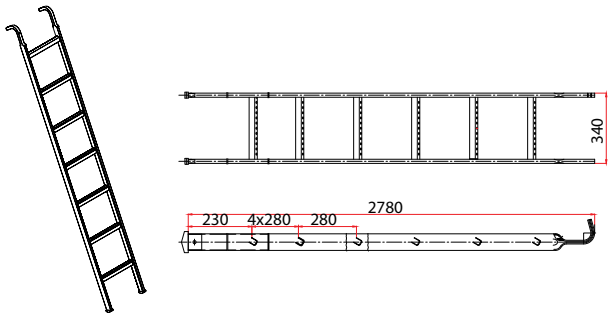

## 29. Passing Platform Plus without ladder

A light passing platform without the ladder (used with the inter-level ladder E511600).

| Index | Dimensions (m) | Weight (kg) |
|---|---|---|
| E492020 | 0.61x2.07 | 15.9 |
| E492030 | 0.61x3.07 | 24.3 |

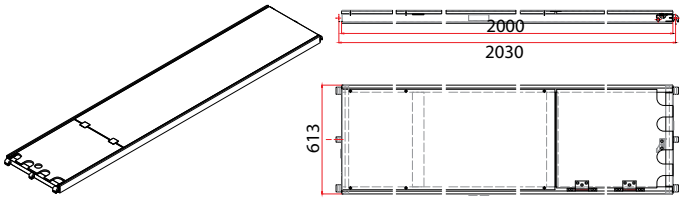


see p. 45

## 30. Passing Platform Plus with ladder

Used for forming circulation paths, fitted with the aluminium ladder.

| Index | Dimensions (m) | Weight (kg) |
|---|---|---|
| E492125 | 0.61x2.57 | 23.8 |
| E492130 | 0.61x3.07 | 29.1 |

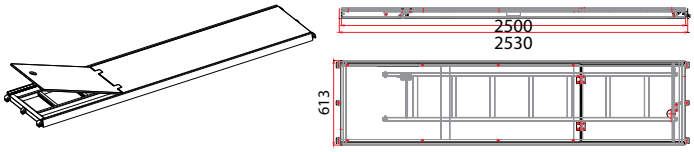


## 31. Steel additional (moveable) Platform

Used to fill space between two scaffolds (load capacity: 2 kN)

| Index | Dimensions (m) | Weight (kg) |
|---|---|---|
| E494310 | 0.3x1.0 | 5.18 |
| E494315 | 0.3x1.5 | 7.47 |
| E494320 | 0.3x2.0 | 9.74 |
| E494325 | 0.3x2.5 | 11.94 |

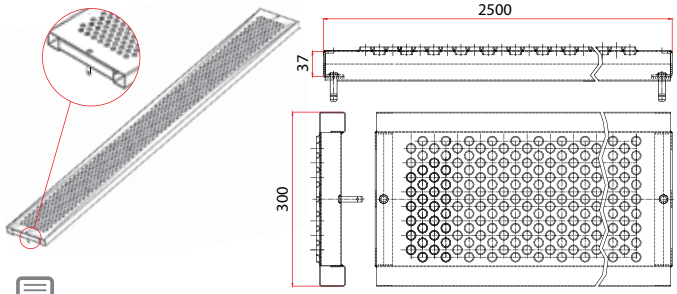


see p. 45

## 32. Additional Platform

Used to fill space between two scaffolds (load capacity: 2 kN).

| Index | Dimensions (m) | Weight (kg) |
|---|---|---|
| E494407 | 0.19x0.7 | 2.88 |
| E494410 | 0.19x1.0 | 3.96 |
| E494415 | 0.19x1.5 | 5.74 |
| E494420 | 0.19x2.0 | 7.53 |
| E494425 | 0.19x2.5 | 9.31 |
| E494430 | 0.19x3.0 | 11.1 |

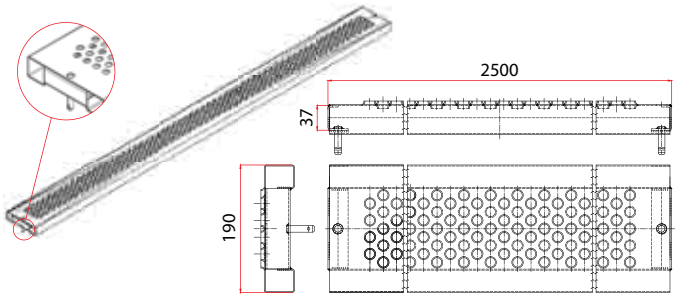


see p. 45

## 33. Special U-transom

A component suspended between the platforms with the wedge clamps. Used when erecting the structures of irregular shapes.

| Index | Dimensions (m) | Weight (kg) |
|---|---|---|
| E372507 | 0.64 | 4.28 |
| E372510 | 0.96 | 7.1 |

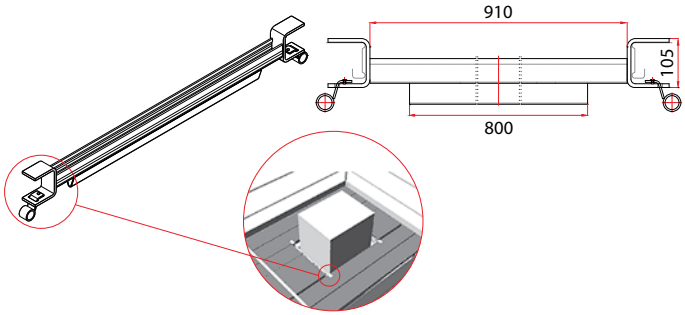


## 34. Overlay Transom

A component installed on the pipes/o-transoms, Used to shorten bays.

| Index | Dimensions (m) | Weight (kg) |
|---|---|---|
| E372607 | 0.73 | 4.0 |
| E372610 | 1.09 | 7.1 |

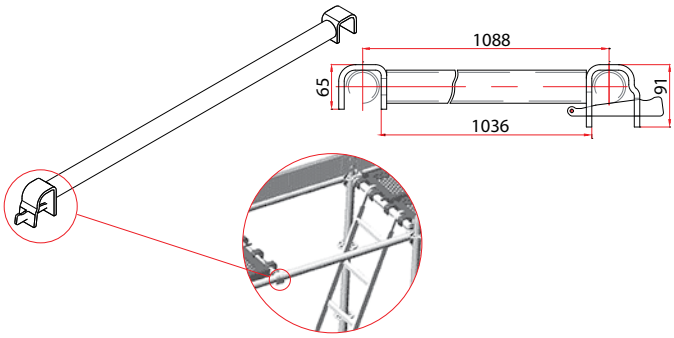


## 35. Aluminium stage Platform

Aluminium and plywood platforms to build stage platforms based on the ROTAX system. Installed on the U-section.

| Index | Dimensions (m) | Weight (kg) |
|---|---|---|
| E499115 | 0.5x1.57 | 17.9 |
| E499120 | 0.5x2.07 | 23.1 |
| E499125 | 0.5x2.57 | 28.2 |
| E499130 | 0.5x3.07 | 35.5 |
| E499215 | 0.57x1.57 | 19.5 |
| E499225 | 0.57x2.57 | 30.9 |

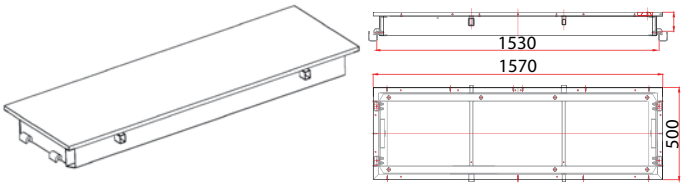

*The Zwierzyniecki Bridge in Wrocław*

## 36. Adjustable corner Platform 45 - 90°

Used to connect corners of two scaffolds.

| Index | Dimensions (m) | Weight (kg) |
|---|---|---|
| E493700 | - | 19.44 |

* made to order

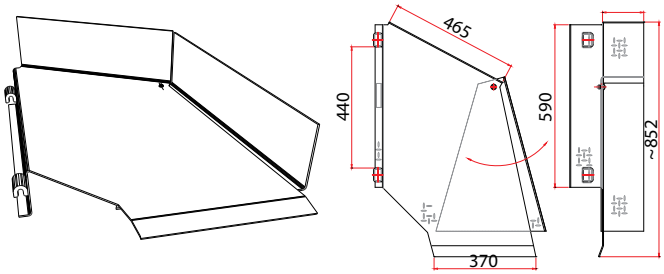


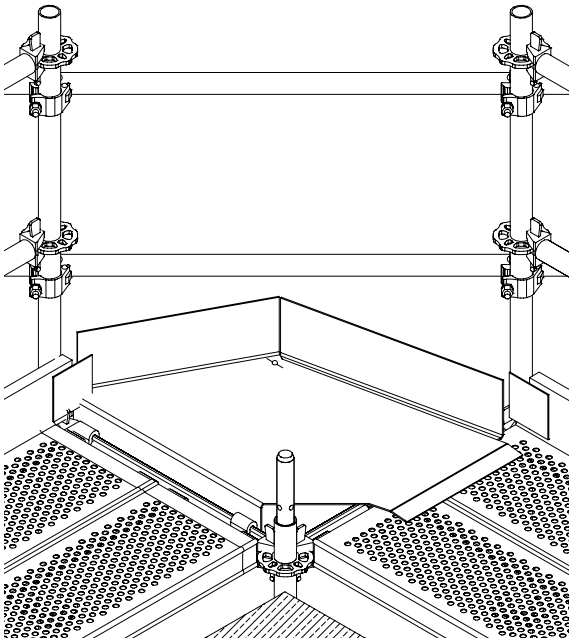

*Use of the corner adjustable platform 45 - 90°*

*Ostrołęka Power Plant*

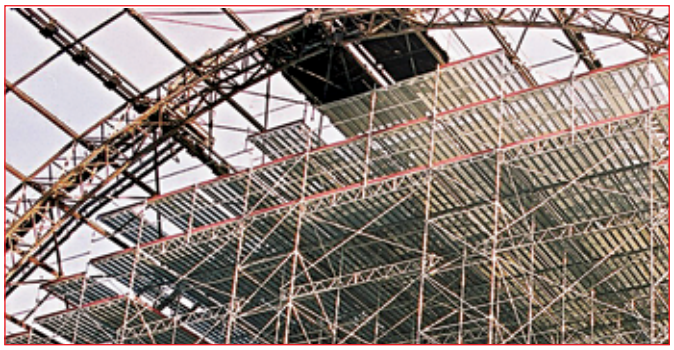

*Kiev Railway Station - Moscow*

## 37. Wooden Toe board ROTAX

A safety component. Made of wood. Suspended on the handles between the vertical stand pipe and the U-transom wedge. Installed at the platform height, protects against falling from height.

| Index | Dimensions (m) | Weight (kg) |
|---|---|---|
| E375107 | 0.15x0.73 | 1.97 |
| E375110 | 0.5x1.09 | 2.85 |
| E375115 | 0.15x1.57 | 4.05 |
| E375120 | 0.15x2.07 | 5.29 |
| E375125 | 0.15x2.57 | 6.53 |
| E375130 | 0.15x3.07 | 7.76 |

* made to order - height: 0.20 m

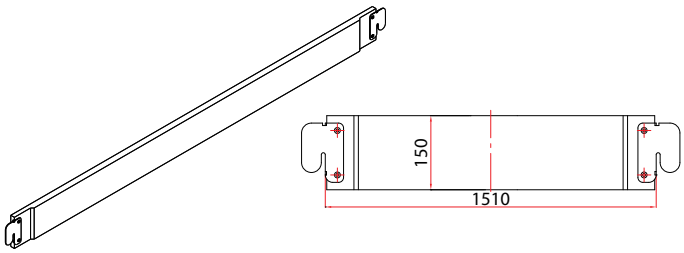

## 38. Steel Toe board

A safety component. Made of steel. Suspended on the handles between the vertical stand pipe and the U-transom wedge. Installed at the platform height, protects employees against falling from height.

| Index | Dimensions (m) | Weight (kg) |
|---|---|---|
| E375507 | 0.5x1.57 | 1.7 |
| E375510 | 0.5x2.07 | 2.38 |
| E375515 | 0.5x2.57 | 3.29 |
| E375520 | 0.5x3.07 | 4.24 |
| E375525 | 0.57x1.57 | 5.19 |
| E375530 | 0.57x2.57 | 6.12 |

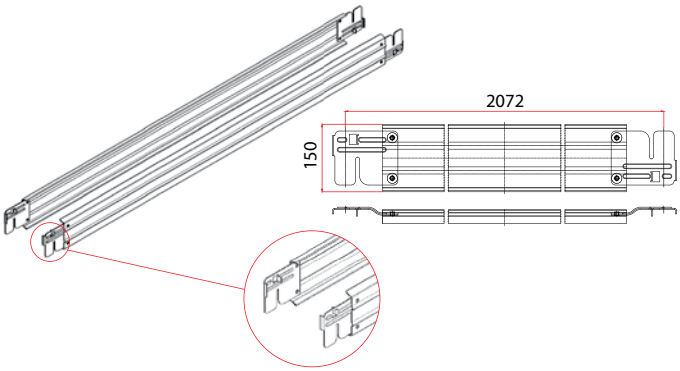


## 39. Standard steel base Jack

Used to properly position the scaffolding without height adjustment. It is a foot with the base of 150 x 150 mm and the pipe pin ø 36 mm.

| Index | Dimensions (m) | Weight (kg) |
|---|---|---|
| E511200 | 0.15 | 1.38 |

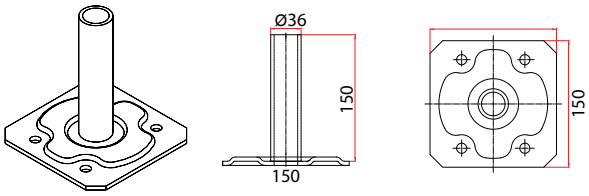


## 40. Steel, adjustable Base jack. Adjustable base jack with nut

Base jacks of various height are used to compensate ground faults. They include a base of 150 x 150 mm with the threaded pipe pin and the socket nut for the pipe. The clamped thread protects the nut against unscrewing (there must be at least 15 cm of the base jack threaded pin in the frame) and loss. A base 40 cm high with the max. unscrewing length of 20 cm, 60 cm with the max. unscrewing length of 40 cm or 80 cm high with the max. unscrewing length of 60 cm. Permissible base jack load: up to 3 t.

| Index | Dimensions (m) | Weight (kg) |
|---|---|---|
| E511204 | 0.40 | 3.29 |
| E511206 | 0.60 | 4.28 |
| E511208 | 0.80 | 5.20 |
| E511313 | 1.50 | 9.52 |
| E511506 | 0.60 | 4.20 |

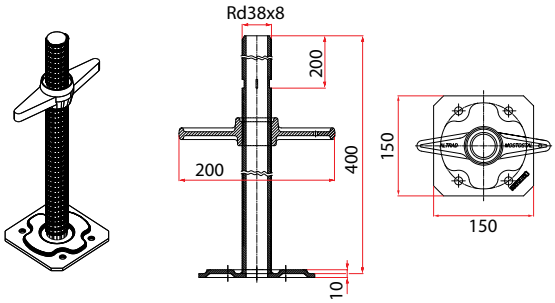


see p. 47

## 41. Steel adjustable tilted base Jack

With the threaded pipe pin installed and tilting in the base of 150 x 150 mm, with the nut and clamp for pipe of ø 48.3 mm. Used to position the frame on the tilted surface.

| Index | Dimensions (m) | Weight (kg) |
|---|---|---|
| E511408 | 0.8 | 7.81 |

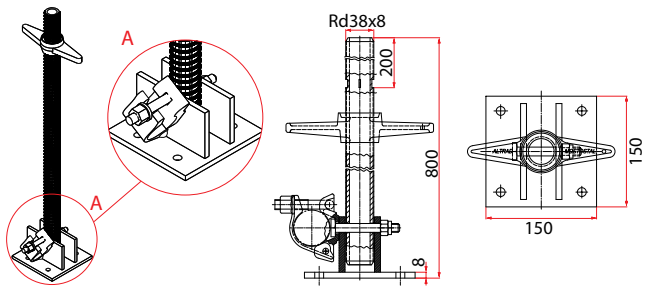


## 42. Threaded Cross Head

Used to support the ceiling formwork. Adjustment range: 350 mm.

| Index | Dimensions (m) | Weight (kg) |
|---|---|---|
| E642210 | - | 10.1 |

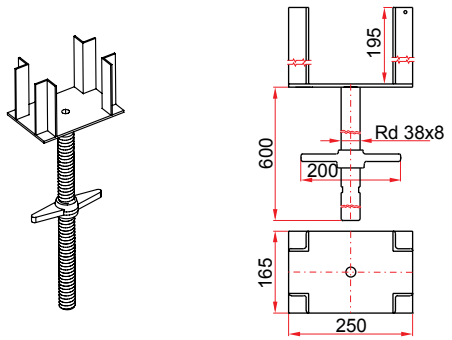


## 43. Steel Console Rotax-U

Used to expand the scaffolding by 0.36 m or 0.73 m, or 1.09 m. Fixed to the stand with the wedge connector.

| Index | Dimensions (m) | Weight (kg) |
|---|---|---|
| E374103 | 0.36 | 3.90 |
| E374107 | 0.73 | 6.52 |
| E374110 | 1.09 | 13.4 |

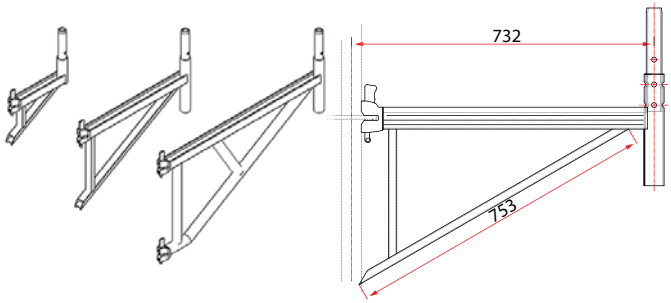


## 44. Steel Console Rotax-0

Used to expand the scaffolding for the O-section platforms.

| Index | Dimensions (m) | Weight (kg) |
|---|---|---|
| E374203 | 0.36 | 3.98 |
| E374207 | 0.73 | 6.78 |

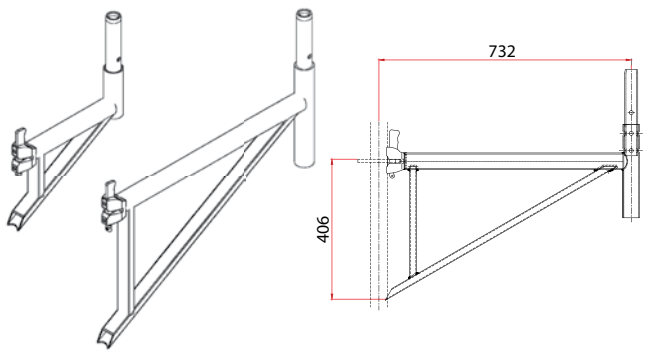

## 45. Adjustable Console

An adjustable console for the platforms with the O-section. Up to 697 mm wide (2 platforms, 0.32).

| Index | Dimensions (m) | Weight (kg) |
|---|---|---|
| E374100 | 0.36 | 4.43 |

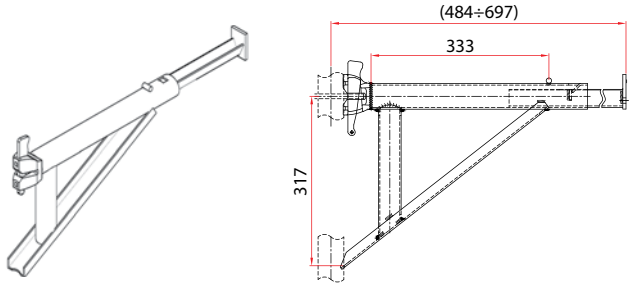


## 46. Vertical brace Console

Console brace, vertical

| Index | Dimensions (m) | Weight (kg) |
|---|---|---|
| E372907 | 0.7 | 7.62 |

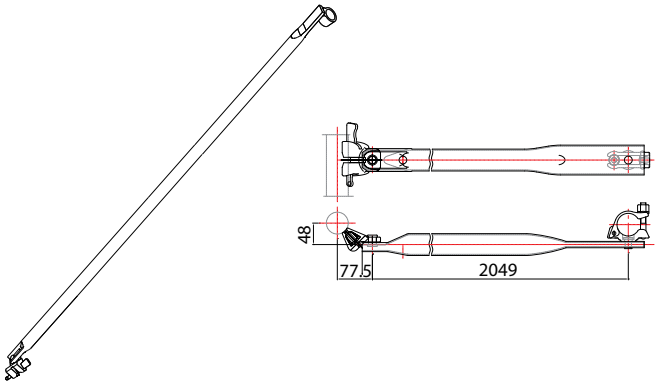


## 47. Diagonal

Used to support the steel 0.73 m (E285579) or 1.09 m (E285519) console. Fitted with the rotating connectors.

| Index | Dimensions (m) | Weight (kg) |
|---|---|---|
| E285179 | 1.75 | 4.9 |
| E285119 | 1.95 | 7.12 |

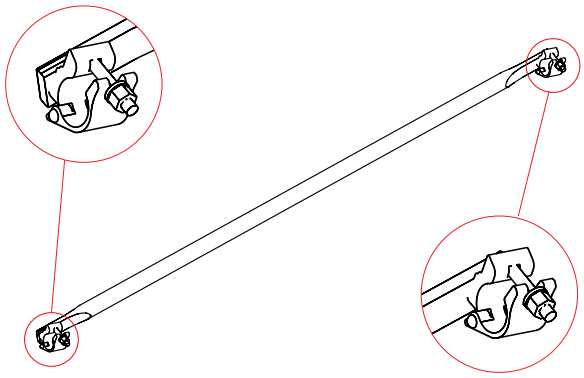

## 48. Girder with U-section

A lattice girder with the additional U-section to suspend serial platforms between the girders. Used when building the platforms.

| Index | Dimensions (m) | Weight (kg) |
|---|---|---|
| E376720 | 2.07x0.50 | 23.78 |
| E376725 | 2.57x0.50 | 28.7 |
| E376730 | 3.07x0.50 | 33.7 |
| E376741 | 4.14x0.50 | 42.8 |
| E376751 | 5.14x0.50 | 54.9 |
| E376761 | 6.14x0.50 | 64.8 |

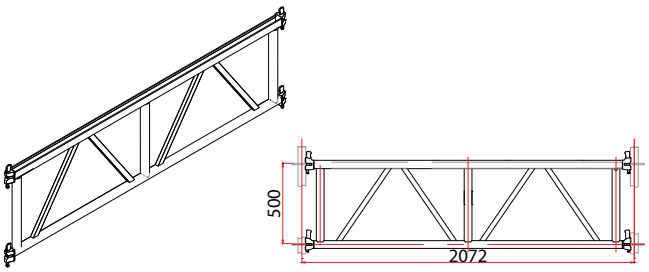


see p. 7

## 49. Girder with O-section

A lattice girder to attach the platforms with the O-section catches. Used when building the platforms.

| Index | Dimensions (m) | Weight (kg) |
|---|---|---|
| E376851 | 5.14 | 56.4 |

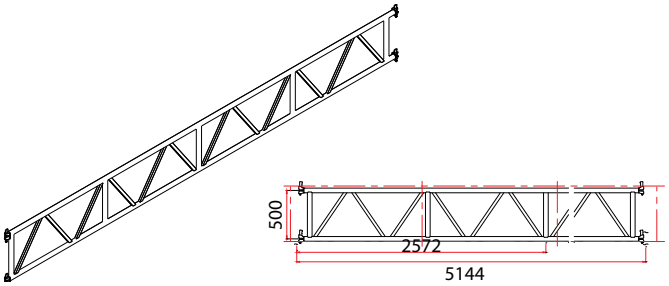


see p. 7

## 50. Steel lattice Girder

Used to build passages under the scaffolding, spans over the structural building elements and all platforms. The girder is connected to the vertical frame with 4 standard connectors. Made of pipes of ø 48.3 x 3.2 mm.

| Index | Dimensions (m) | Weight (kg) |
|---|---|---|
| E503330 | 0.40x3.00 | 29.2 |
| E503332 | 0.40x3.24 | 31.2 |
| E503340 | 0.40x4.00 | 39.2 |
| E503342 | 0.40x4.24 | 39.6 |
| E503352 | 0.40x5.24 | 48.5 |
| E503360 | 0.40x6.00 | 57.4 |
| E503362 | 0.40x6.24 | 58.0 |
| E503230 | 0.50x3.24 | 36.4 |
| E503240 | 0.50x4.24 | 45.6 |
| E503250 | 0.50x5.24 | 54.8 |
| E503260 | 0.50x6.24 | 64.8 |

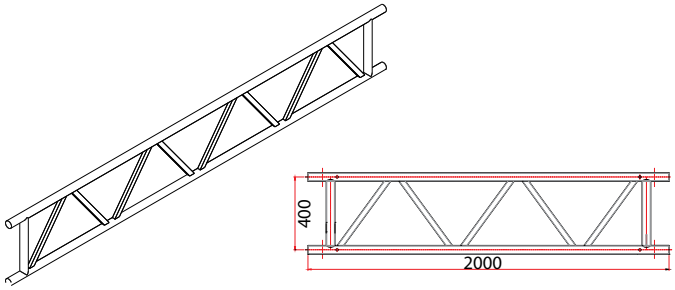


see p. 44

## 51. Aluminium lattice Girder

An alternative to the steel lattice girder, features lower weight. Its advantage is a much easier installation and removal due to lower weight.

| Index | Dimensions (m) | Weight (kg) |
|---|---|---|
| E501230 | 0.40x3.00 | 12.7 |
| E501240 | 0.40x4.00 | 17.0 |
| E501252 | 0.40x5.24 | 20.9 |
| E501260 | 0.40x6.00 | 24.7 |
| E501262 | 0.40x6.24 | 25.1 |
| E501280 | 0.40x8.00 | 32.4 |
| E501330 | 0.50x3.24 | 14.9 |
| E501340 | 0.50x4.24 | 18.8 |
| E501350 | 0.50x5.24 | 22.6 |
| E501360 | 0.50x6.24 | 26.4 |
| E501380 | 0.50x8.24 | 34.4 |

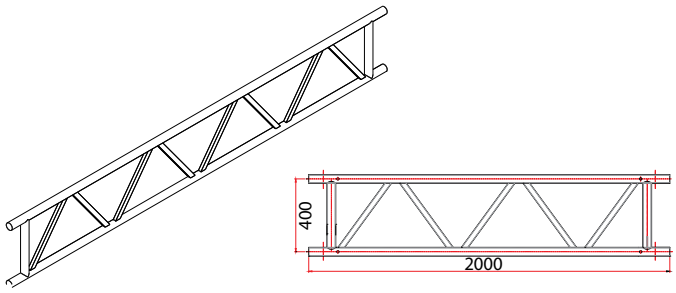


see p. 44

## 52. Aluminium Cross-beam for platforms

It is a u-section for 2, 3, 4, 5, 6 platforms 0.32 m wide and for the suitable girders 3 m, 4 m, 5 m and 6 m long. Fixed to the upper girder belt with the connector. Used when building the platforms.

| Index | Dimensions (m) | Weight (kg) |
|---|---|---|
| E501006 | 0.60 | 2.70 |
| E501009 | 0.90 | 3.30 |
| E501012 | 1.20 | 3.80 |
| E501016 | 1.60 | 5.20 |
| E501019 | 1.90 | 5.80 |
| E501030 | 3.00 | 8.50 |
| E501040 | 4.00 | 10.2 |
| E501050 | 5.00 | 12.7 |
| E501060 | 6.00 | 15.2 |

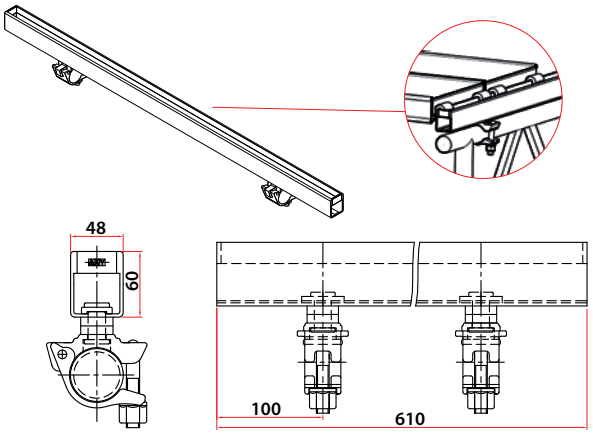


## 53. Lattice Girder for roof

A component to connect to girders systematically when erecting the roofs of halls and tents.

| Index | Dimensions (m) | Weight (kg) |
|---|---|---|
| E502140 | 0.40 | 8.20 |

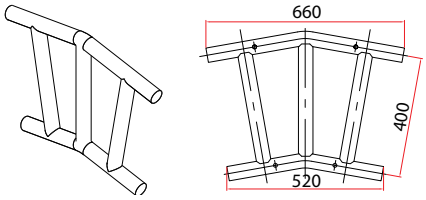


## 54. Girder console

Connects the frame and the girder. Provides an inclination angle of 10° for hall or tent roof slope.

| Index | Dimensions (m) | Weight (kg) |
|---|---|---|
| E503507 | 0.73 | 5.99 |

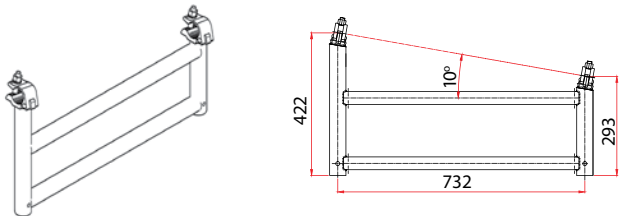


## 55. Girder connector with connecting pieces

Allows you to connect the lattice girders o various length to provide a span 6 - 12 m long.

| Index | Dimensions (m) | Weight (kg) |
|---|---|---|
| E502000 | 0.44 | 2.2 |

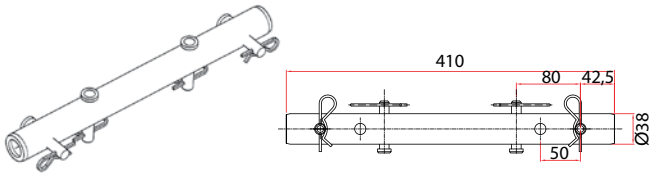


## 56. Pipe connector, for girder

Fixed to the U-section, installed on the girders to change the bay length.

| Index | Dimensions (m) | Weight (kg) |
|---|---|---|
| E376700 | - | 1.80 |

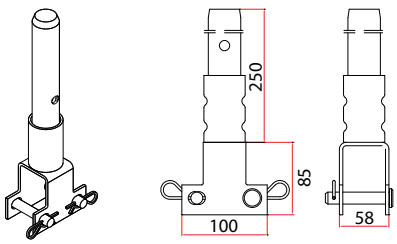

## 57. Pipe connector with connection

Fixed to the O-section, installed on the girders to change the bay length.

| Index | Dimensions (m) | Weight (kg) |
|---|---|---|
| E581701 | - | 1.60 |

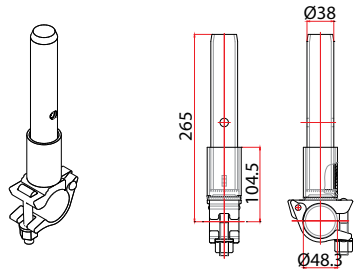


## 58. Aluminium Platform with O-section catches

Allows you to build ceiling, communication and inspection platforms.

| Index | Dimensions (m) | Weight (kg) |
|---|---|---|
| E490940 | 4.0 | 33.64 |
| E490960 | 6.0 | 48.13 |

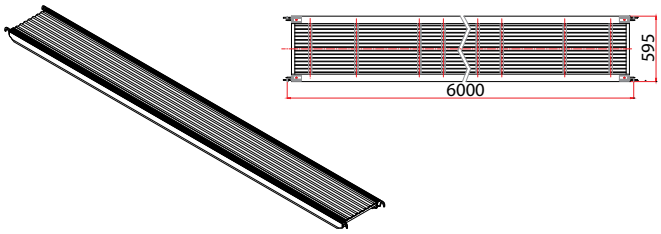


## 59. Aluminium Platform

Allows you to build ceiling, communication and inspection platforms.

| Index | Dimensions (m) | Weight (kg) |
|---|---|---|
| E491042 | 4.25x0.59 | 32.7 |
| E491052 | 5.20x0.59 | 39.0 |
| E491061 | 6.10x0.59 | 46.0 |
| E491071 | 7.10x0.59 | 52.5 |

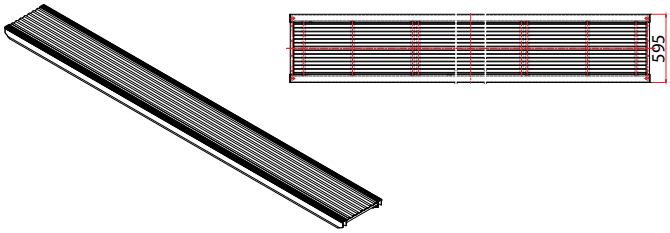


## 60. Aluminium Post for railing. Railing clamp. Clamp for aluminium platform

Components used with the aluminium platform. The aluminium post for the railing and the railing clamp as well as the pipe of ø 48.3 mm are used to install the protection railings on the aluminium platforms. The clamp for the aluminium platform is used to clamp the adjacent platforms to increase to platform or circulation path width.

| Index | Dimensions (m) | Weight (kg) |
|---|---|---|
| E491001 | - | 2.50 |
| E491002 | - | 0.38 |
| E491003 | - | 0.30 |

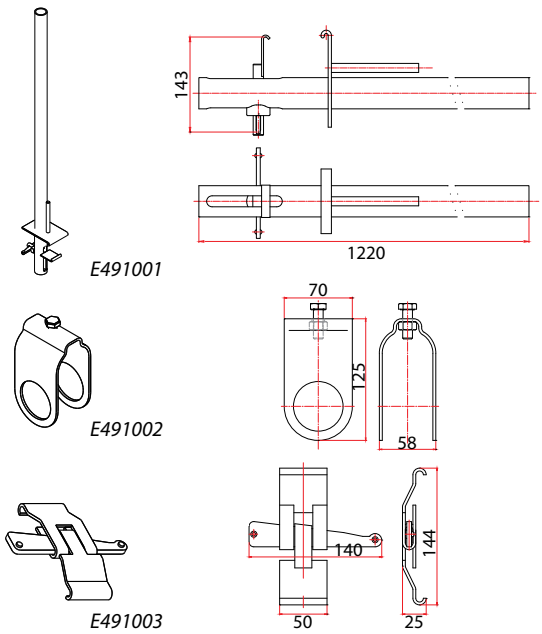

## 61. Aluminium Stairs

Ensure comfortable access to the scaffolding and material handling.

| Index | Dimensions (m) | Weight (kg) |
|---|---|---|
| E286225 | 0.64x2.57 | 25.1 |
| E286230 | 0.64x3.07 | 29.9 |

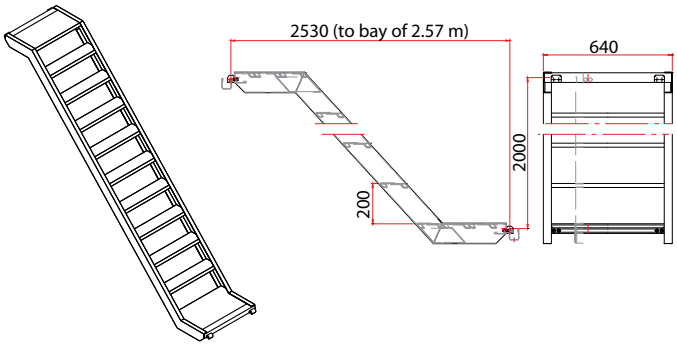


## 62. External Railing for stairs

Ensures safe access to and exit from the frame scaffolding staircase.

| Index | Dimensions (m) | Weight (kg) |
|---|---|---|
| E374925 | 2.57 | 18.6 |
| E374930 | 3.07 | 20.6 |

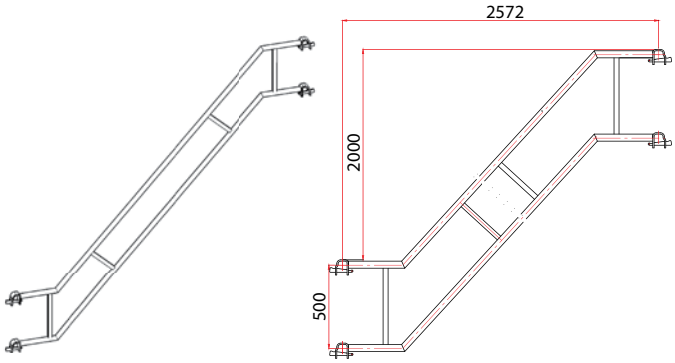


## 63. Internal Railing for stairs

Ensures safe access to and exit from the scaffolding.

| Index | Dimensions (m) | Weight (kg) |
|---|---|---|
| E286300 | - | 11.97 |

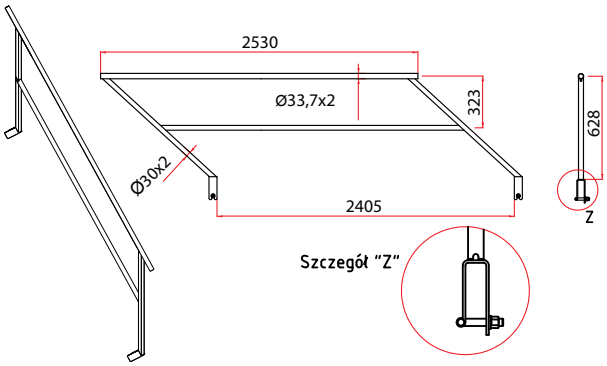


## 64. Handle for railing

Ensures safe access to and exit from the scaffolding.

| Index | Dimensions (m) | Weight (kg) |
|---|---|---|
| E374800 | - | 0.89 |

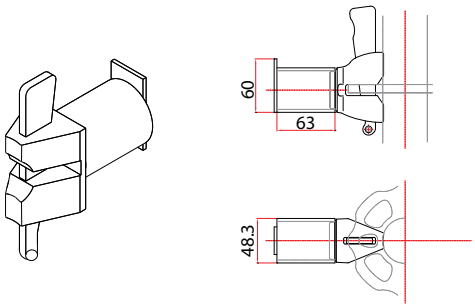

## 65. Load-bearing beams for stairs

Used to construct the temporary stairs structure with the systemic dimensions. Steps are made of steel platforms.

| Index | Dimensions (m) | Weight (kg) |
|---|---|---|
| E377015 | 1.0x1.57 | 15.3 |
| E377025 | 2.0x2.57 | 30.8 |

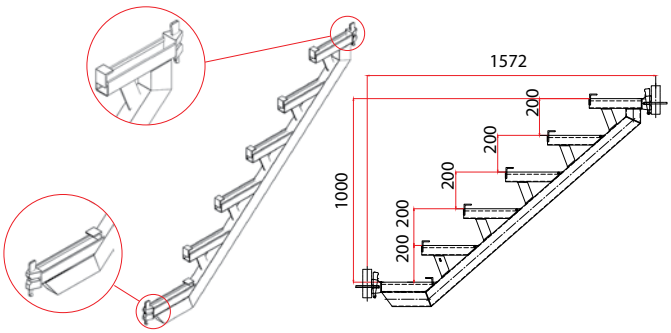


## 66. Steel standard Pipe

A standard component used in the structures with bays of atypical and different length. Pipe diameter: ø 48.3 mm.

| Index | Dimensions (m) | Weight (kg) |
|---|---|---|
| E440510 | 0.048x1.00 | 3.58 |
| E440520 | 0.048x2.00 | 7.16 |
| E440530 | 0.048x3.00 | 10.7 |
| E440540 | 0.048x4.00 | 14.3 |
| E440550 | 0.048x5.00 | 17.9 |
| E440560 | 0.048x6.00 | 21.5 |

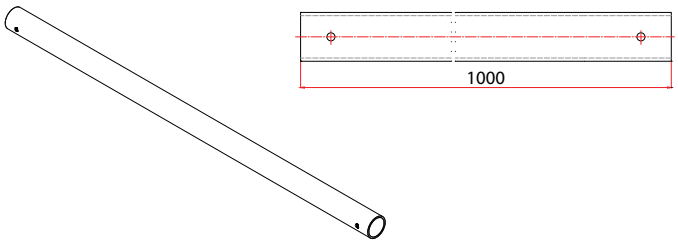


## 67. Aluminium standard Pipe

An alternative to the steel pipe - E4405xx..

| Index | Dimensions (m) | Weight (kg) |
|---|---|---|
| E440610 | 0.048x1.00 | 1.50 |
| E440620 | 0.048x2.00 | 3.00 |
| E440630 | 0.048x3.00 | 4.51 |
| E440640 | 0.048x4.00 | 6.01 |
| E440650 | 0.048x5.00 | 7.51 |
| E440660 | 0.048x6.00 | 9.02 |

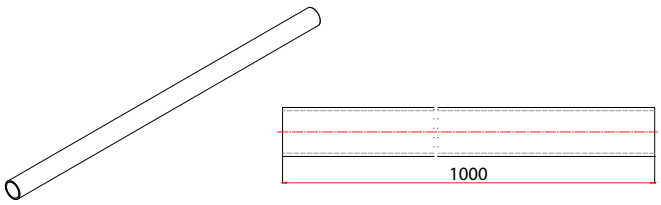


## 68. Normal connector

Used to connect two pipes of ø 48.3 mm at 90°. Used to anchor the scaffolding to the facility. Fixed within the gusset plate of the vertical frame with the anchoring connector. Permissible normal connector load is 9.1 kN.

| Index | Dimensions (m) | Weight (kg) |
|---|---|---|
| E581119 | - | 1.25 |

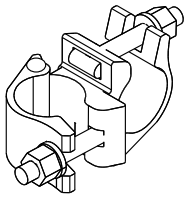

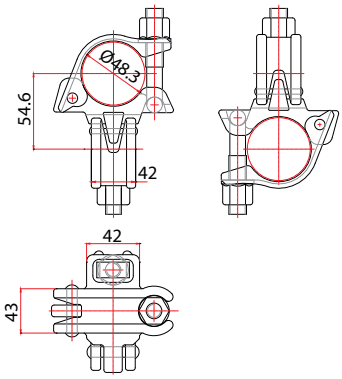


see p. 45

## 69. Rotating connector

With the flange nuts, used to connect two pipes of ø 48.3 mm at any angle. Permissible rotating connector load is 5.9 kN.

| Index | Dimensions (m) | Weight (kg) |
|---|---|---|
| E581319 | 0.40x2.45 | 1.50 |

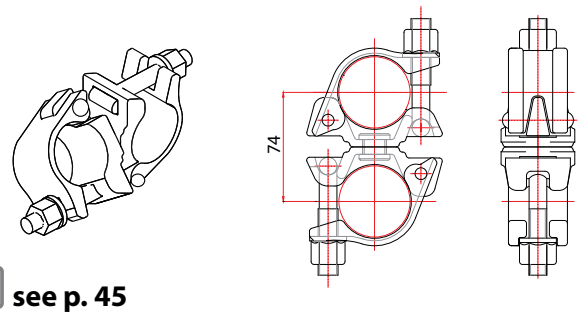


see p. 45

## 70. Longitudinal connector

Used to connect two pipes of ø 48.3 mm longitudinally while keeping their coaxiality. The longitudinal connector should be used only with the centring pin 5FDIV10001 fixed where the two pipes contact each other. Permissible longitudinal connector load is 6 kN.

| Index | Dimensions (m) | Weight (kg) |
|---|---|---|
| E581419 | - | 1.50 |
| 5FDIV10001 | - | 1.30 |

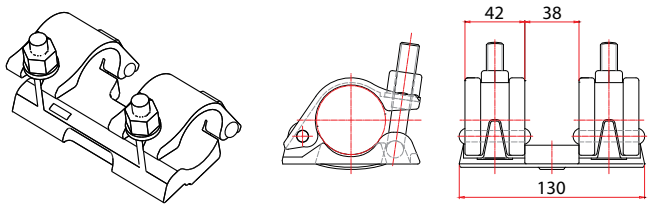


see p. 45

## 71. Anchoring connector

Used to anchor the scaffolding with the standard pipes of ø 48.3 mm and the normal connectors. Used instead of the anchoring connection.

| Index | Dimensions (m) | Weight (kg) |
|---|---|---|
| E284610 | - | 0.99 |

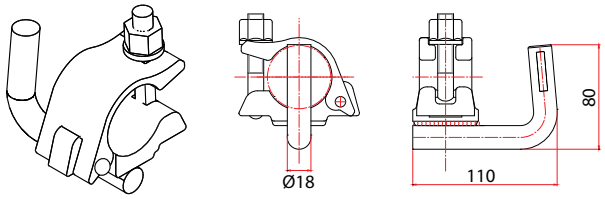


see p. 45

## 72. Double, normal wedge Rotating Connector

Used to connect the pipe of ø 48.3 mm to the stand disk.

| Index | Dimensions (m) | Weight (kg) |
|---|---|---|
| E373900 | - | 1.36 |
| E373901 | - | 1.21 |
| E373001 | - | 1.22 |

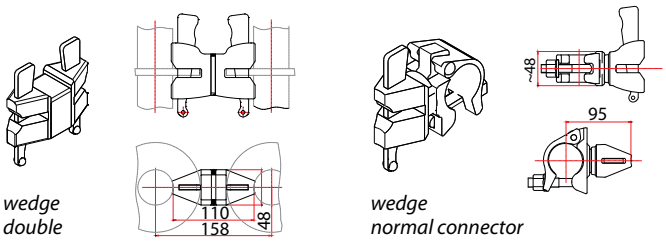


*wedge double connector (E373900)*

*wedge normal connector (E373901)*

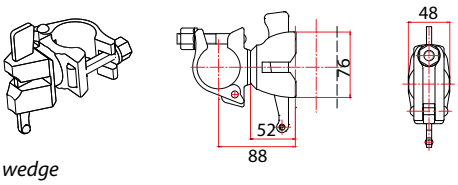


*wedge rotating connector (E373001)*

see p. 45

## 73. Clamping connector

Used to connect the pipe of ø 48.3 mm to the steel building load-bearing structure components (e.g. I-sections). Connection should always be made of two connectors.

| Index | Dimensions (m) | Weight (kg) |
|---|---|---|
| E284620 | - | 1.09 |

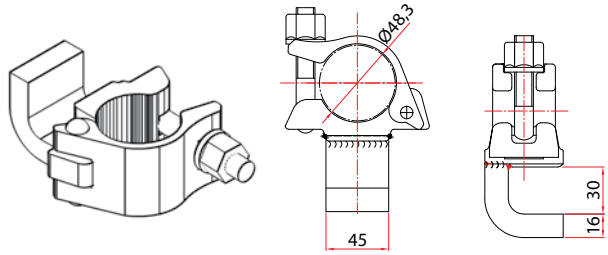


see p. 45

## 74. Anchoring spacing Connector with hook

Long anchoring connectors (1.30 m and 1.50 m long) are fixed to the vertical frames with two normal connectors for both frame stands. Short anchoring connectors (0.40 m and 0.80 m long) are fixed with one normal connector for only one frame stand located at the wall.

| Index | Dimensions (m) | Weight (kg) |
|---|---|---|
| E286504 | 0.40 | 1.66 |
| E286508 | 0.80 | 2.96 |
| E286513 | 1.30 | 4.58 |
| E286515 | 1.50 | 5.20 |

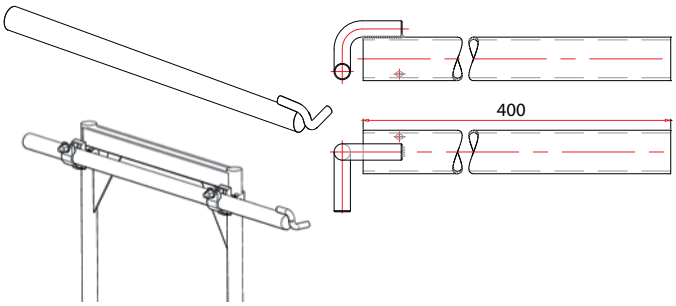


## 75. Safety cotter pin

A cotter pin protects the vertical frames against disengagement. It is inserted through the frame connection holes.

| Index | Dimensions (m) | Weight (kg) |
|---|---|---|
| E511100 | - | 0.10 |

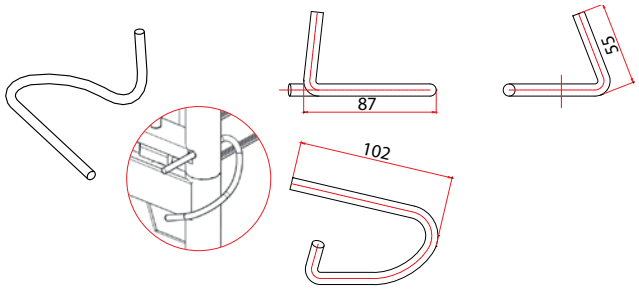


## 76. Assembly post

A component of the Safety Kit. One kit includes two posts which form with the telescopic railing a temporary protection for the person assembling the scaffolding.

| Index | Dimensions (m) | Weight (kg) |
|---|---|---|
| E206600 | 2.00 | 6.6 |

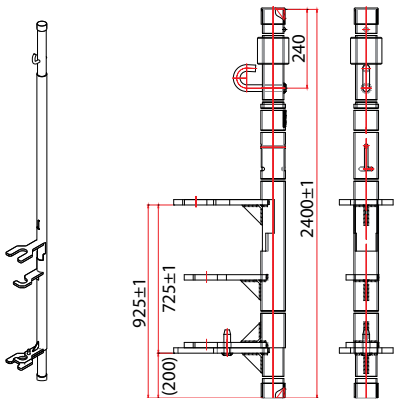

*Use of the assembly post*

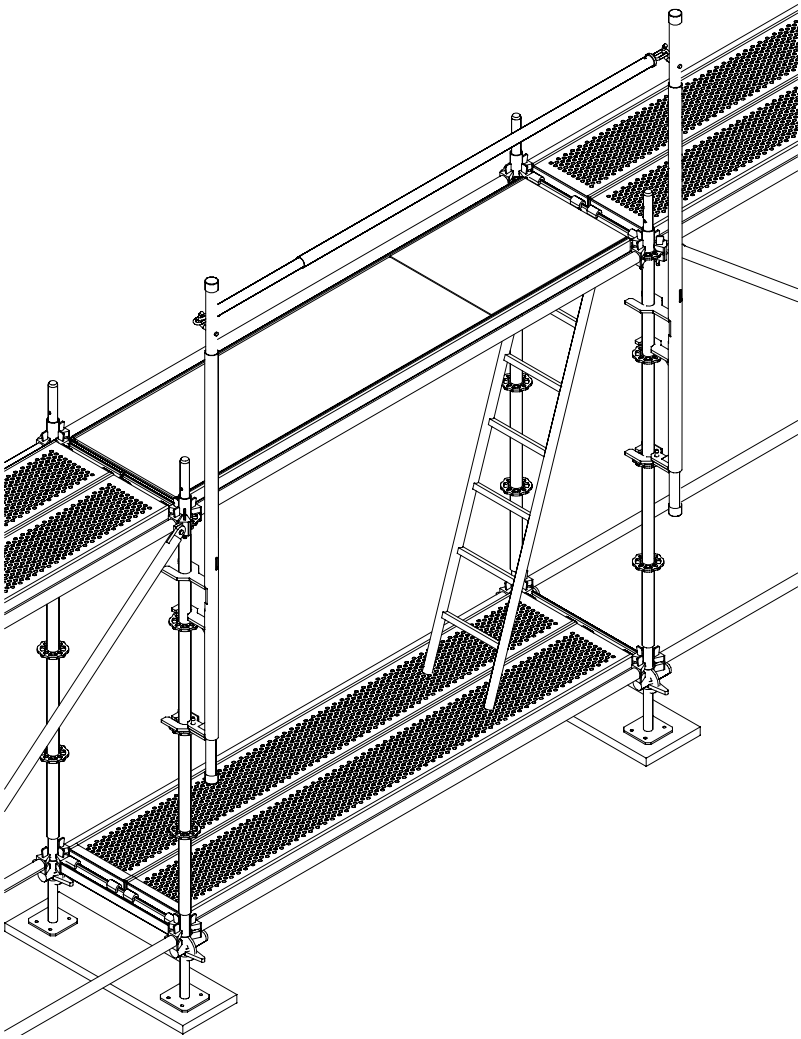

*Radom Cathedral*

*Town Hall in Lwówek Śląski*

## 77. Telescopic railing

A component of the Safety Kit. Used to move the assembly posts on next levels without the need to remove the kit. Adjustment range: from 1.5 up to 2.07 m or from 2.07 up to 3.7 m.

| Index | Dimensions (m) | Weight (kg) |
|---|---|---|
| E206700 | 2.07-3.70 | 4.23 |
| E206800 | 1.57-2.07 | 3.45 |

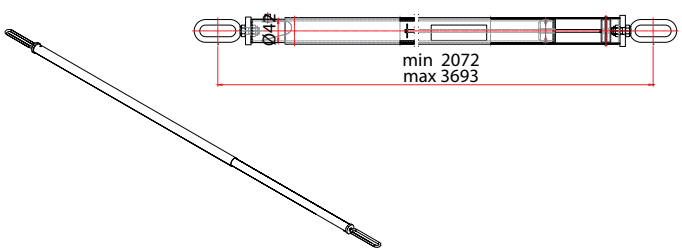

## 78. Mobile scaffolding guide beam

Used to assemble the mobile scaffolding of the ROTAX Plus scaffolding components. Used only with the base jack with two E571175 nuts and the MP-116 road wheel, and the horizontal brace.

| Index | Dimensions (m) | Weight (kg) |
|---|---|---|
| E571110 | 1.09x2.6 | 37.8 |
| E571173 | 0.73x1.9 | 26.3 |

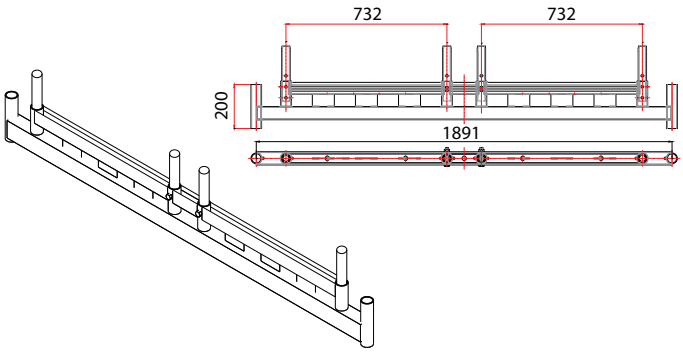


## 79. Base jack with two nuts

Used to compensate ground faults. Used also as a base jack of the mobile scaffolding.

| Index | Dimensions (m) | Weight (kg) |
|---|---|---|
| E571175 | 0.40 | 4.10 |

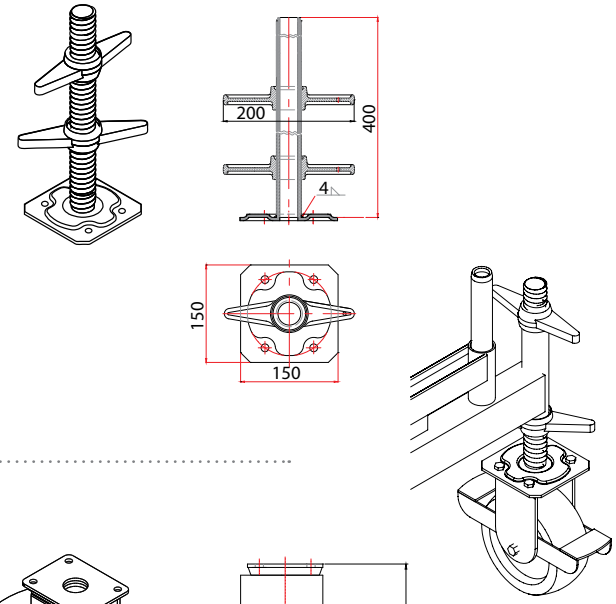


## 80. Road wheel

Used with E571175. The effective load of one wheel is 750 kg. The wheel is fitted with a lock.

| Index | Dimensions (m) | Weight (kg) |
|---|---|---|
| MP-116 | - | 4.00 |

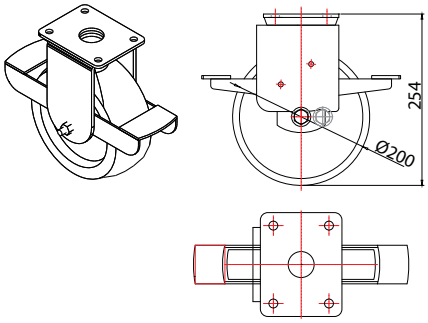


## 81. Plastic rawplug

A plug of ø 14 mm made of plastic, used to fix the eyebolts (E5110xx).

| Index | Dimensions (m) | Weight (kg) |
|---|---|---|
| E511907 | 14 / 70 | 0.03 |
| E511910 | 14 / 100 | 0.03 |

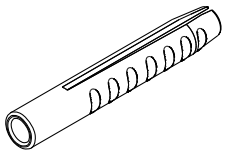

## 82. Anchor eye bolt

Bolt used for anchoring the scaffolding to a wall, used together with the rawplug (E511907).

| Index | Dimensions (m) | Weight (kg) |
|---|---|---|
| E511012 | 0.12 | 0.20 |
| E511016 | 0.16 | 0.25 |
| E511019 | 0.19 | 0.30 |
| E511023 | 0.23 | 0.40 |
| E511028 | 0.28 | 0.50 |
| E511030 | 0.30 | 0.55 |
| E511035 | 0.35 | 0.60 |

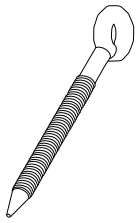

## 83. Hole plug

Used for plugging the holes created after removing the anchor bolts.

| Index | Dimensions (m) | Weight (kg) |
|---|---|---|
| E511800 | - | 0.01 |

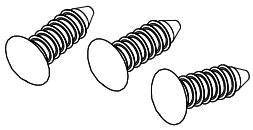

## 84. Tee head bolt, flange nut

Used together with the E581302 flange nut. A spare part for the couplings.

| Index | Name | Weight (kg) |
|---|---|---|
| E581301 | Tee head bolt | 0.10 |
| E581302 | Flange nut | 0.04 |

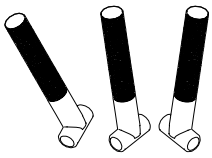

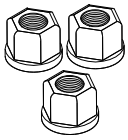

## 85. Scaffolding net

Securing net reinforced with the black-coloured threads, with fixing holes every 10 cm on the entire length. Basis weight – approx 65 g/m2. Wind permeability – 50-55%.

| Index | Dimensions (m) | Weight (kg) |
|---|---|---|
| E732025 | 2.57x10 | 0.40 |
| | 2.57x20 | - |
| E732030 | 3.07x10 | 0.05 |
| | 3.07x20 | - |

## 86. Scaffolding canvas cover

The canvas cover coated on both sides (polyethylene – TEX 12x12 fabric). Basis weight approx 180 g/m2.

| Index | Dimensions (m) | Weight (kg) |
|---|---|---|
| E733725 | 2.60x10 | 0.18 |
| | 2.60x20 | - |
| E733730 | 3.10x10 | 0.18 |
| | 3.10x20 | - |

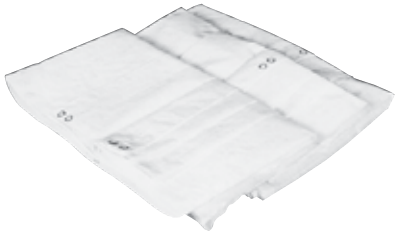

## 87. Electric hoisting winches - Mini 605, Maxi 1205, Maxi 1505

Lifting capacity - 120 kg; 2 lifting speeds 20/60 m/min; power - 0.45/1.35 kW; power supply - 230 V/50 Hz.
Lifting capacity - 150 kg; 2 lifting speeds 15/45 m/min; power - 0.45/1.35 kW; power supply - 230 V/50 Hz.

| Index | |
|---|---|
| E552606 with 51 m cable | 50.0 |
| with 81 m cable | 56.0 |
| E552612 with 51 m cable | 60.0 |
| with 81 m cable | 65.0 |
| E552615 with 51 m cable | 60.0 |
| with 81 m cable | 65.0 |

| No. | Index | Component name | L./H. (m) | B. (m) | G. (kg) | |
|---|---|---|---|---|---|---|
| 1. | E824301 | Scaffolding pallet for 23 steel or aluminium frames, galvanized | 1.58/1.41 | 0.88 | 53.0 | |
| 2. | E824302 | Pallet for 15 E491325 or E491930 aluminium platforms for 30 E491325 or E491330 steel platforms, galvanized | 1.58/1.41 | 0.73 | 52.0 | |
| 3. | E826701 | Platform transport transom | 0.67/0.24 | - | 4.28 | 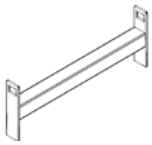 |
| 4. | E823800 | Module pallet | 1.2/0.82 | 0.8 | 29.0 | 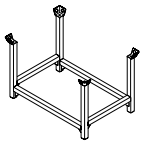 |
| 5 | E822900 | Grid pallet/Module basket | 1.06/0.59 | 0.61 | 30.4 | 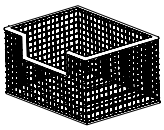 |
| 6. | E823808 | Net pallet | 1.2/0.82 | 0.8 | 58.5 | 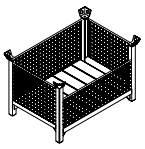 |

## 7. List of STAND components

The Altrad Event stand system is a set of components which can be removed and installed many times so as to create seats and standing room for spectators. The system is built on the structural grid 2.57 m and 1.57 m long, and 2.57 m wide which can be expanded in all directions.

The Altrad Event stand components and the components of the ROTAX Plus scaffolding ensure you can built even a complex spatial stand structure very quickly and with confidence.

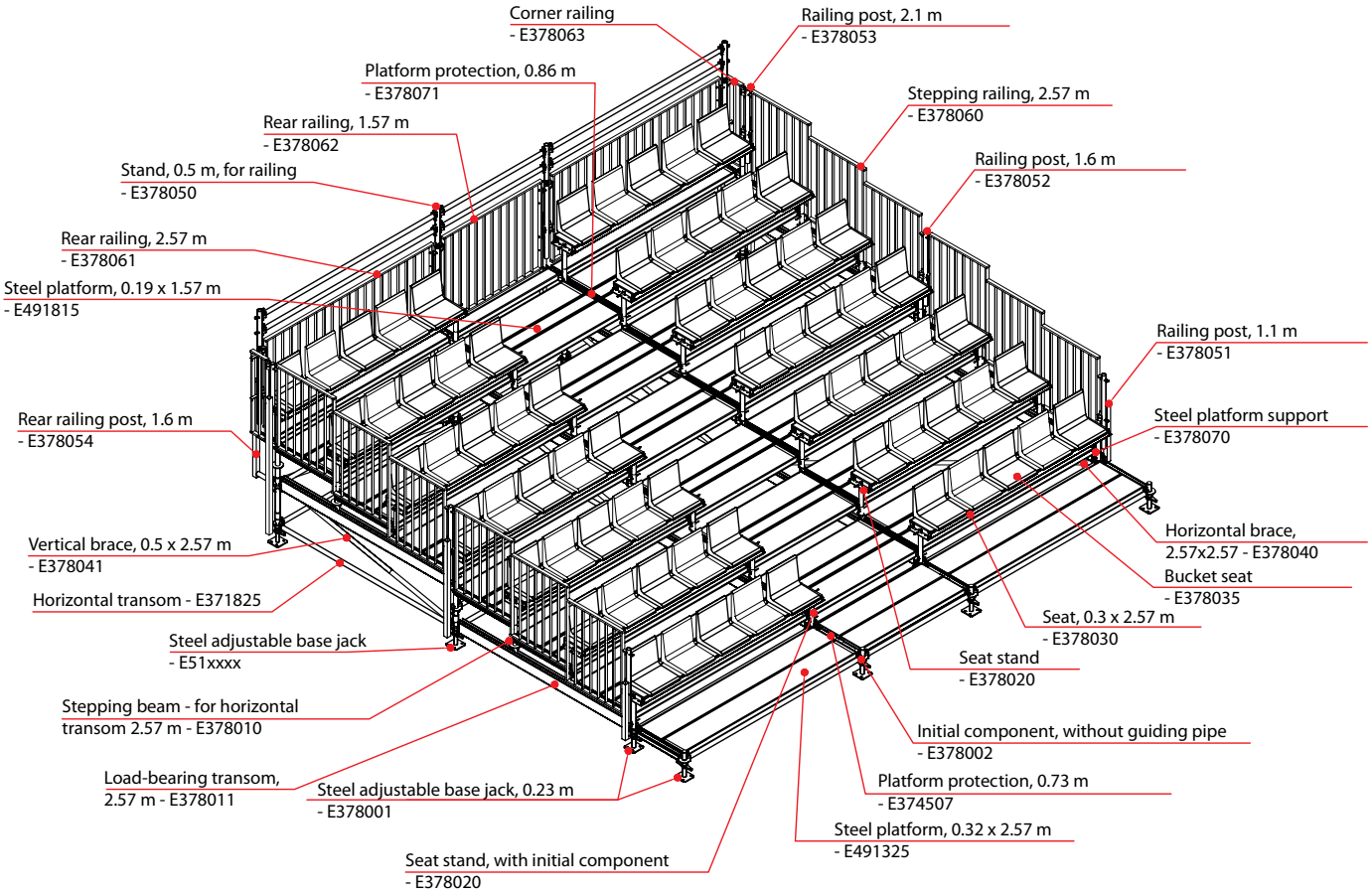

*Example of a stand*

## 1. Steel, adjustable base Jack 0.23 m

A component with the foot base, pipe threaded pin and the nut. Maximum extension height - 130 mm. This base jack is used only in the lowest stand rows.

| Index | Dimensions (m) | Weight (kg) |
|---|---|---|
| E378001 | 0.23 | 2.7 |

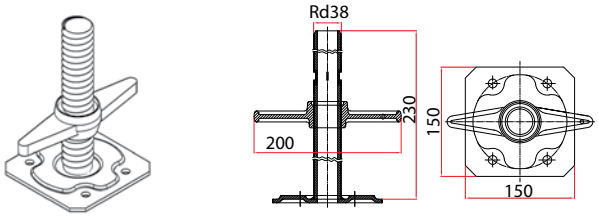


## 2. Initial component without guiding pipe

A component with the hole disk to attach the horizontal transoms. The initial component matches the adjustable base jacks and is used in the lowest stand rows. Since there is no guiding pipe you cannot install any stands on this component.

| Index | Dimensions (m) | Weight (kg) |
|---|---|---|
| E378002 | - | 1.1 |

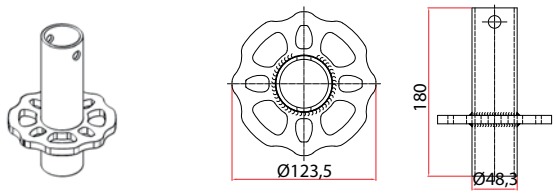


## 3. Stepping beam - for load-bearing transom, 2.57 m

A steel component installed on the 2.57 m load-bearing transom. The stepping beams ensures the whole stand can be inclined. Stepped every 167 mm.

| Index | Dimensions (m) | Weight (kg) |
|---|---|---|
| E378010 | 2.57 | 10.5 |

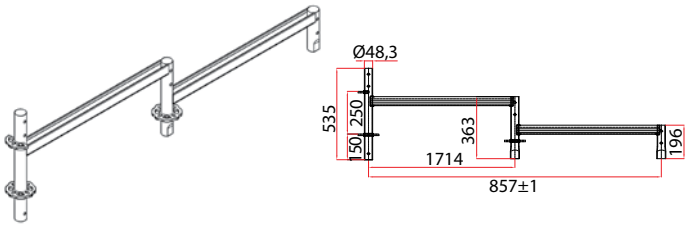


## 4. Load-bearing transom, 2.57 m

A main horizontal load-bearing component of a stand that supports the steel or stage platforms. Permissible uniformly distributed load - 7.5 kN/m.

| Index | Dimensions (m) | Weight (kg) |
|---|---|---|
| E378011 | 2.57 | 34.4 |

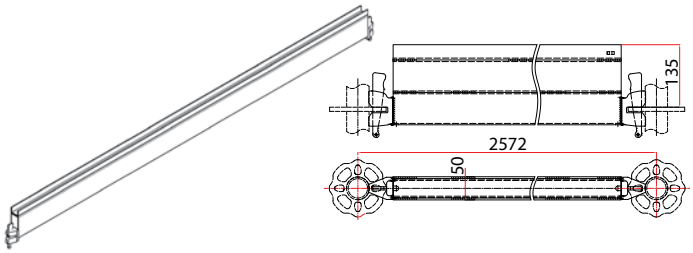

## 5. Overlay for double transom, 2.57 m

This component matches the double 2.57 m u-transom (E373525) and is an alternative to the 2.57 m load-bearing beam.

| Index | Dimensions (m) | Weight (kg) |
|---|---|---|
| E378018 | 2.57 | 12.5 |

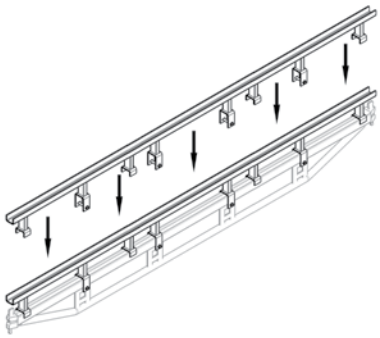

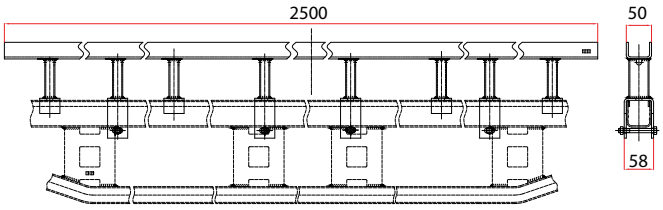


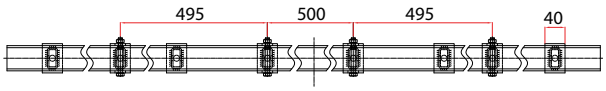


## 6. Seat stand

A steel component fixed to the stepping beam. Supports the aluminium seat (E378030).

| Index | Dimensions (m) | Weight (kg) |
|---|---|---|
| E378020 | - | 3.5 |

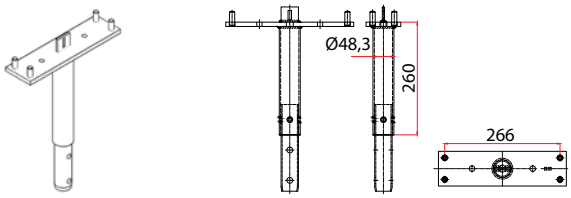


## 7. Stand for seat 0.45 m with initial component

A steel component which supports the aluminium seat (E378030). The stand is fitted with the hole disk and installed only in the lowest stand rows.

| Index | Dimensions (m) | Weight (kg) |
|---|---|---|
| E378021 | - | 4.2 |

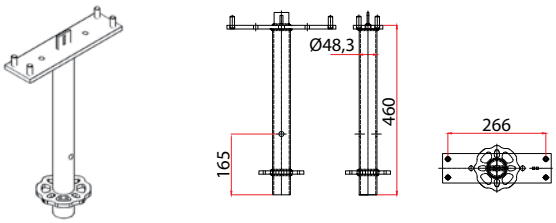

## 8. Seat bucket PVC

A component made of a weather-proof plastic. Fixed to the aluminium and plywood seat (E378030) with two M8 x 40 screws.

| Index | Dimensions (m) | Weight (kg) |
|---|---|---|
| E378035 | - | 1.5 |

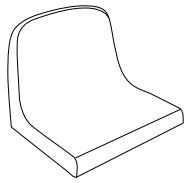

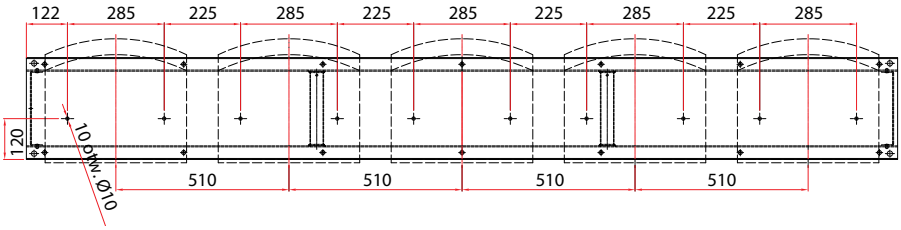


## 9. Aluminium and plywood Seat, 0.3 x 2.57 m

A component with the aluminium structure, covered with the waterproof plywood. The seat serves independently as a bench or a load-bearing component with the bucket seats (E378030) installed.

| Index | Dimensions (m) | Weight (kg) |
|---|---|---|
| E378030 | 0.3x2.57 m | 19.5 |

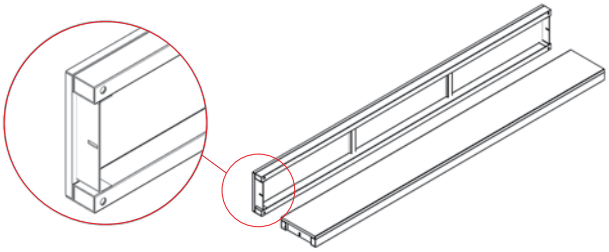

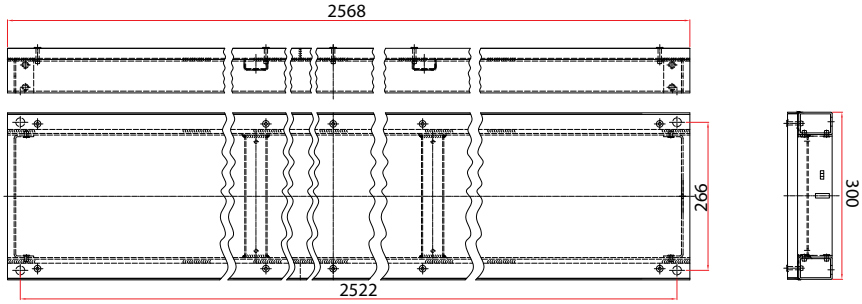


## 10. Horizontal brace

A steel component that stiffens the stand structure horizontally.

| Index | Dimensions (m) | Weight (kg) |
|---|---|---|
| E378040 | 2.57x2.57 | 9.9 |

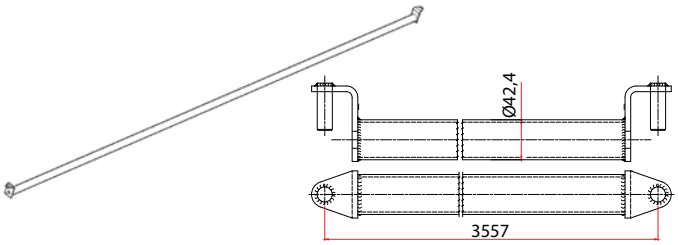

## 11. Vertical brace

A steel component that ensures the vertical stand structure planes are stiff.

| Index | Dimensions (m) | Weight (kg) |
|---|---|---|
| E378041 | 2.57x0.5 | 9.0 |

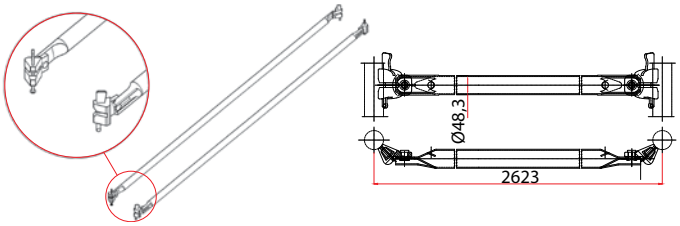


## 12. Stand for railings

A stand installed on the railing posts. The stand structure allows you to lift the horizontal railings by installing the standard horizontal Rotax Plus transoms.

| Index | Dimensions (m) | Weight (kg) |
|---|---|---|
| E378050 | 0.5 | 3.0 |

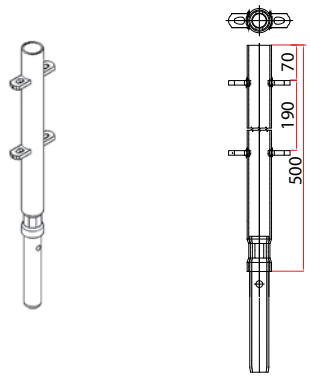


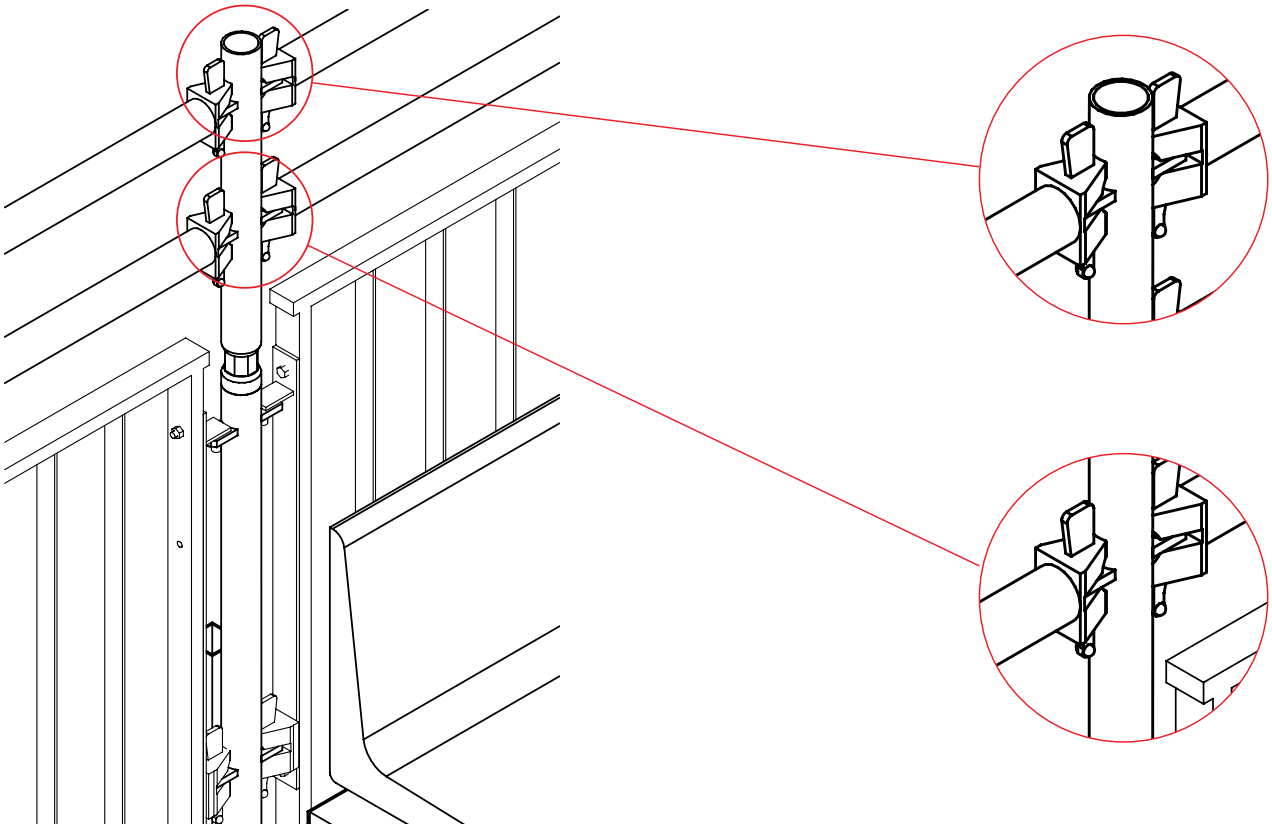

## 13. Posts for railings

Components to attach the protection railings. You can also fix the 0.19 m steel platform to the rear 1.6 m railing post. The posts are fixed to the hole disks of the stands, initial components or stepping beams with the heads.

| Index | Dimensions (m) | Weight (kg) |
|---|---|---|
| E378051 | 1.1 | 6.5 |
| E378052 | 1.6 | 8.8 |
| E378053 | 2.1 | 10.3 |

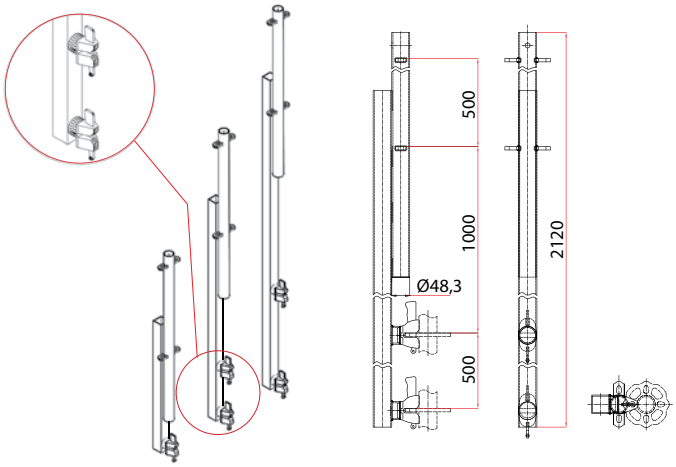


## 14. Rear Post for railings

The railing posts are fixed to the hole disks of the stands, initial components or stepping beams with the heads. Installation of the railing posts depends on the stand set-up. The posts are used to install the protection railings. You can also fix the 0.19 m platforms to the rear 1.6 m railing post.

| Index | Dimensions (m) | Weight (kg) |
|---|---|---|
| E378054 | 1.6 m | 10.3 |

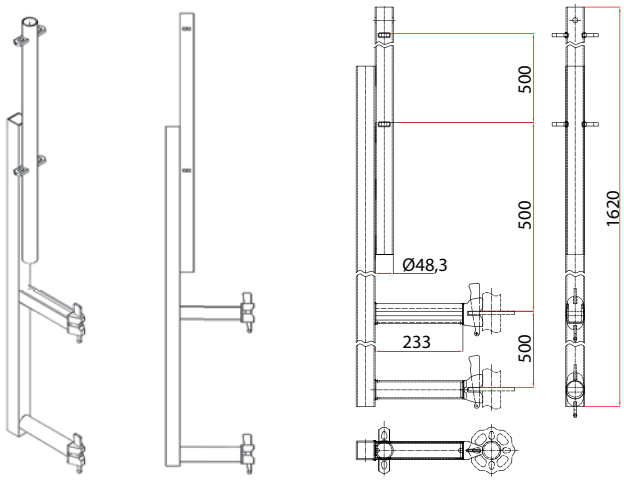


## 15. Stepping Rail

A steel component used as a side stand protection. Railing height: 1.1 m.

| Index | Dimensions (m) | Weight (kg) |
|---|---|---|
| E378060 | 2.57 | 31.3 |

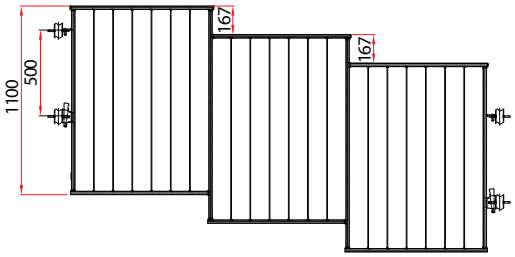


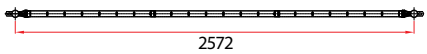


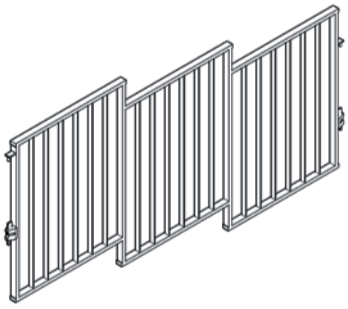

## 16. Rear Rail

A steel component used to protect the stand sides. Railing height: 1.1 m from the platform level. The railing structure allows you to change the position of the assembly catches.

| Index | Dimensions (m) | Weight (kg) |
|---|---|---|
| E378061 | 2.57 | 30.45 |
| E378062 | 1.57 | 21.20 |

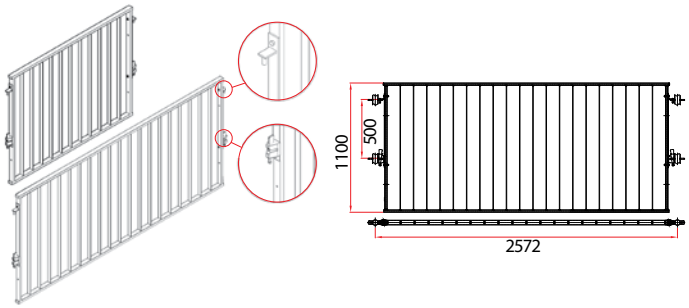


## 17. Corner Rail

A steel protection component. Installed in the stand corners to complete the railings.

| Index | Dimensions (m) | Weight (kg) |
|---|---|---|
| E378063 | - | 7.0 |

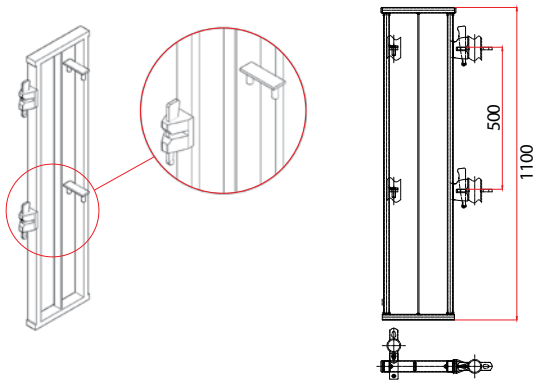


## 18. Support for steel platform

A steel component used only when the stand structure is completed with the steel platforms. Serves as a support for the platform catch.

| Index | Dimensions (m) | Weight (kg) |
|---|---|---|
| E378070 | - | 0.5 |

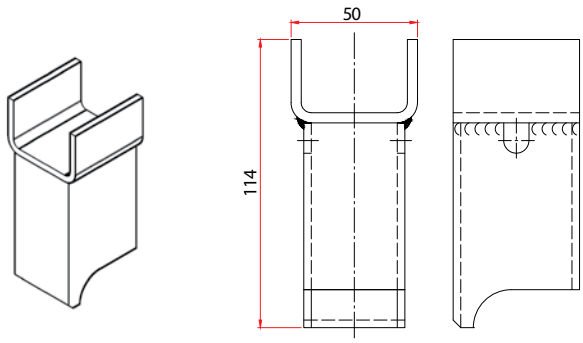


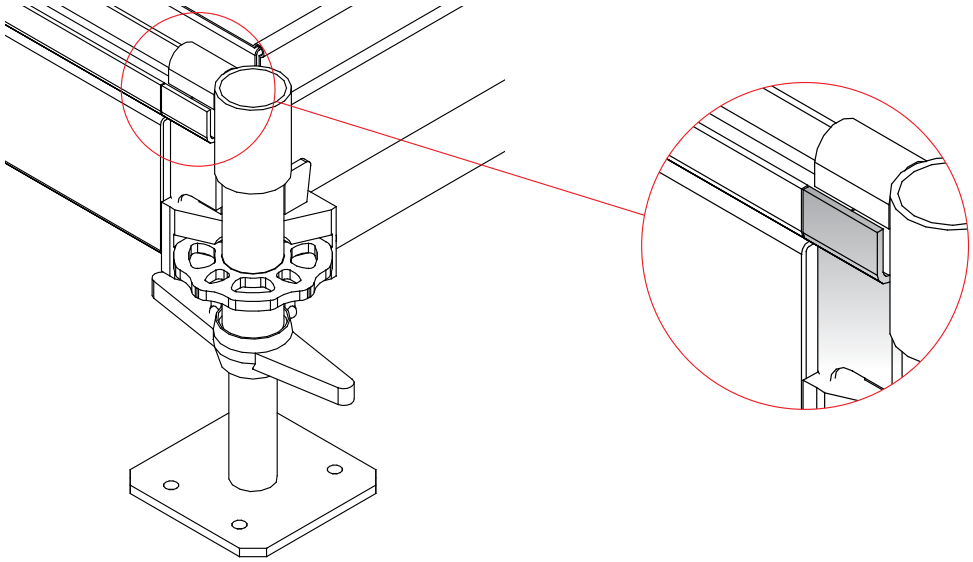

## 19. Protection for platform

A steel component used to protect both the steel platforms and the seat stands against lifting. The protection is locked with the cotter pin (E511100).

| Index | Dimensions (m) | Weight (kg) |
|---|---|---|
| E378071 | 0.86 | 1.80 |

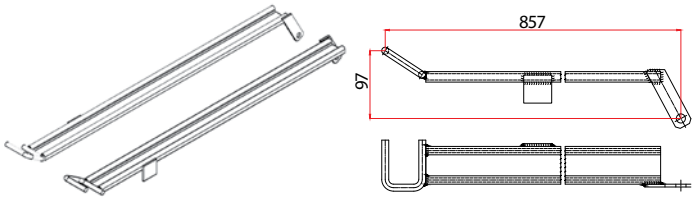


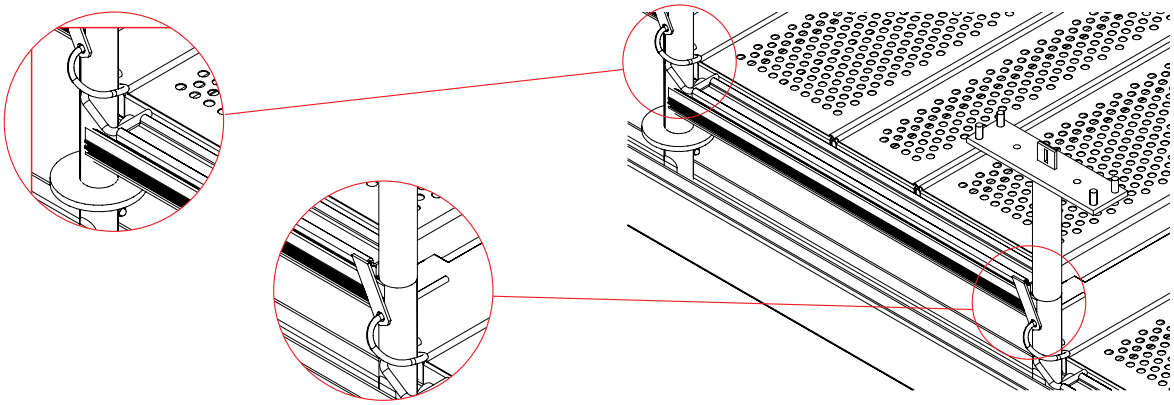

## 20. Cap for platforms

A steel component used only with four aluminium and plywood platforms (E4993...) - completes the contact of these platforms.

| Index | Dimensions (m) | Weight (kg) |
|---|---|---|
| E378072 | - | 0.2 |

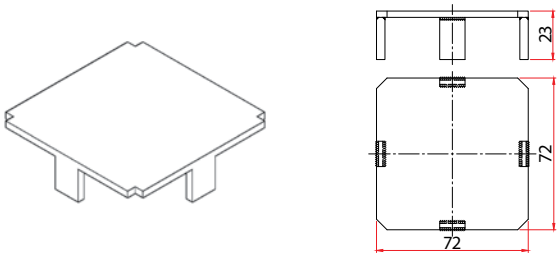


## 21. Aluminium and plywood Platform

Components with the aluminium structure, completed with plywood, used to complete the stand structure and build the stage platforms. Permissible effective load: 5 kN/m2.

| Index | Dimensions (m) | Weight (kg) |
|---|---|---|
| E499315 | 0.86x1.57 | 26.9 |
| E499325 | 0.86x2.57 | 42.4 |

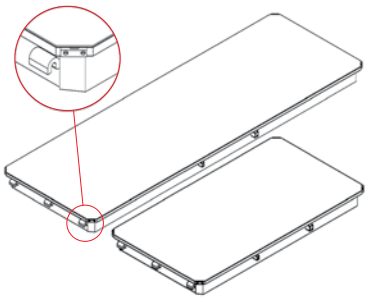

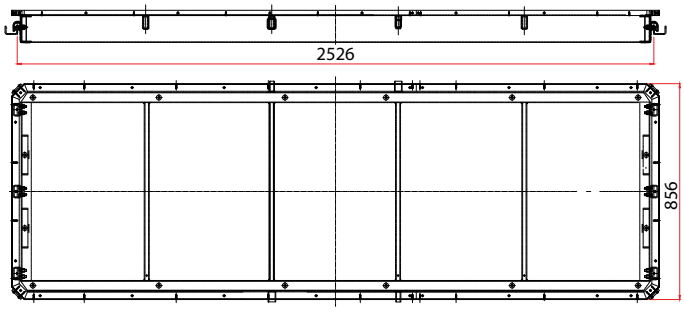

## 8. Altrad Event stage - complete with stage platforms

| No. | COMPONENT NAME | SYMBOL | STAND HEIGHT [m] (fixed stand width: 5 x 2.57 m + 2 x 1.57 m) | | | | | |
|---|---|---|---|---|---|---|---|---|
| | | | 1.0 | 2.0 | 3.0 | 4.0 | 5.0 | 6.0 |
| 1 | Initial component | E371300 | 16 | 32 | 48 | 64 | 80 | 96 |
| 2 | Stand, 0.5 m | E371405 | 8 | 8 | 8 | 8 | 16 | 8 |
| 3 | Stand, 1.0 m | E371410 | 0 | 8 | 8 | 8 | 8 | 8 |
| 4 | Stand 1.5 m | E371415 | 0 | 8 | 8 | 8 | 8 | 16 |
| 5 | Stand 2.0 m | E371420 | 0 | 0 | 8 | 8 | 8 | 8 |
| 6 | Stand, 2.5 m | E371425 | 0 | 0 | 8 | 8 | 8 | 8 |
| 7 | Stand, 3.0 m | E371430 | 0 | 0 | 0 | 8 | 8 | 8 |
| 8 | Stand, 3.5 m | E371435 | 0 | 0 | 0 | 8 | 8 | 8 |
| 9 | Stand, 4.0 m | E371440 | 0 | 0 | 0 | 0 | 8 | 8 |
| 10 | Horizontal transom, 2.57 m | E371825 | 48 | 107 | 192 | 303 | 440 | 603 |
| 11 | Horizontal transom, 1.57 m | E371815 | 16 | 30 | 48 | 70 | 96 | 126 |
| 12 | Adjustable base jack, 0.4 m | E511204 | 16 | 32 | 48 | 64 | 80 | 96 |
| 13 | Alu. platform, complete, 0.61 x 2.57 m | E491125 | 5 | 5 | 5 | 5 | 5 | 5 |
| 14 | Alu. platform, complete, 0.61 x 1.57 m | E491115 | 2 | 2 | 2 | 2 | 2 | 2 |
| 15 | Steel platform, 0.19 x 2.57 m | E491825 | 5 | 5 | 5 | 5 | 5 | 5 |
| 16 | Steel platform, 0.19 x 1.57 m | E491815 | 2 | 2 | 2 | 2 | 2 | 2 |
| 17 | Stage platform, 0.86 x 2.57 m | E499325 | 30 | 60 | 90 | 120 | 150 | 180 |
| 18 | Stage platform, 0.86 x 1.57 m | E499315 | 12 | 24 | 36 | 48 | 60 | 72 |
| 19 | Transverse U-transom, 0.73 m | E372407 | 8 | 8 | 8 | 8 | 8 | 8 |
| 20 | Protection wedge | E371800a | 56 | 104 | 152 | 200 | 248 | 296 |
| 21 | Platform protection, 0.73 mm | E374507 | 8 | 8 | 8 | 8 | 8 | 8 |
| 22 | Stepping beam - for load-bearing beam, 2.57 m | E378010 | 16 | 32 | 48 | 64 | 80 | 96 |
| 23 | Load-bearing transom, 2.57 m | E378011 | 16 | 32 | 48 | 64 | 80 | 96 |
| 24 | Seat stand | E378020 | 48 | 96 | 144 | 192 | 240 | 288 |
| 25 | Seat, 0.32 x 2.57 m, with seat holes | E378030 | 35 | 65 | 95 | 125 | 155 | 185 |
| 26 | Protection cotter pin | E511100 | 56 | 104 | 152 | 200 | 248 | 296 |
| 27 | Vertical brace, 2.57 x 1.0 m | E373225 | 0 | 22 | 66 | 132 | 220 | 330 |
| 28 | Vertical brace, 2.57 x 2.57 m | E378040 | 4 | 8 | 12 | 16 | 20 | 24 |
| 29 | Vertical brace, 2.57 x 0.5 m | E378041 | 11 | 11 | 11 | 11 | 11 | 11 |
| 30 | Seat stand, 0.45 m, with initial component | E378021 | 8 | 8 | 8 | 8 | 8 | 8 |
| 31 | Railing post, 1.1 m | E378051 | 2 | 2 | 2 | 2 | 2 | 2 |
| 32 | Railing post, 1.6 m | E378052 | 2 | 2 | 2 | 2 | 2 | 2 |
| 33 | Railing post, 2.1 m | E378053 | 2 | 6 | 10 | 14 | 18 | 22 |
| 34 | Rear railing post, 1.6 m | E378054 | 8 | 8 | 8 | 8 | 8 | 8 |
| 35 | Stepping railing, 2.57 m | E378060 | 4 | 8 | 12 | 16 | 20 | 24 |
| 36 | Rear railing, 2.57 m | E378061 | 5 | 5 | 5 | 5 | 5 | 5 |
| 37 | Corner railing | E378063 | 2 | 2 | 2 | 2 | 2 | 2 |
| 38 | Initial component, without guiding pipe | E378002 | 8 | 8 | 8 | 8 | 8 | 8 |
| 39 | Steel adjustable base jack, 0.23 m | E378001 | 8 | 8 | 8 | 8 | 8 | 8 |
| 40 | Rear railing, 1.57 m | E378062 | 2 | 2 | 2 | 2 | 2 | 2 |
| 41 | Bucket seat (PCV) | E378035 | 175 | 325 | 475 | 625 | 775 | 925 |
| 42 | Screw, M8x40, with washer and nut | ---------- | 350 | 650 | 950 | 1250 | 1550 | 1850 |
| | | | Used in the covered areas | | | | | |
| | | | Used in the free areas | | | | | |

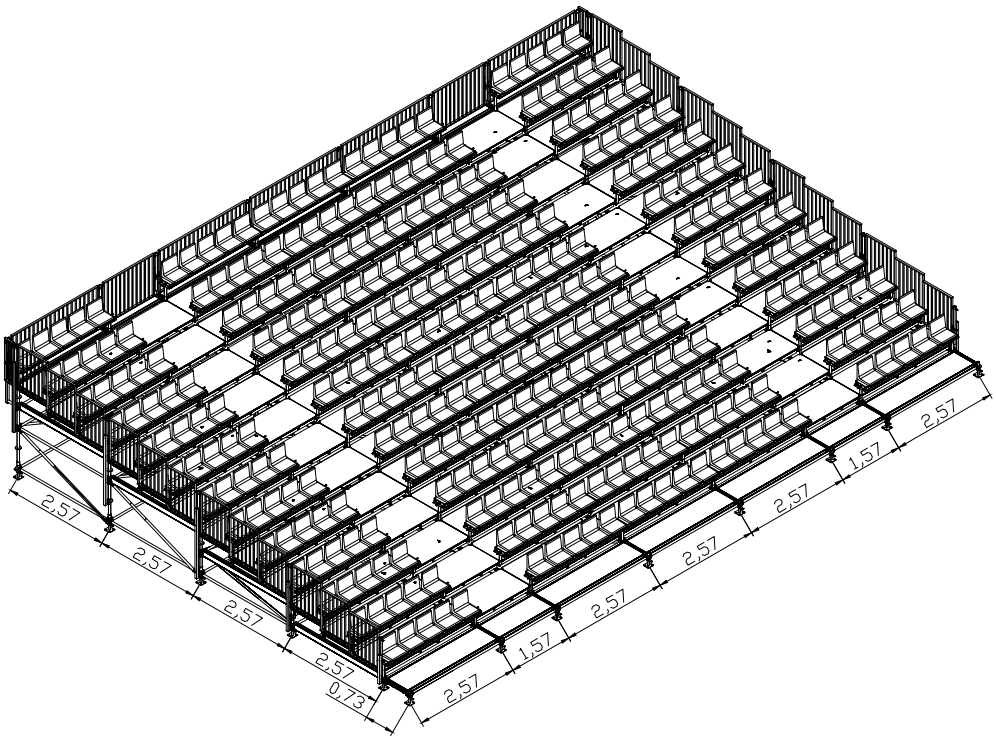


*Altrad Event stand - complete with stage platforms, H = 2 m*

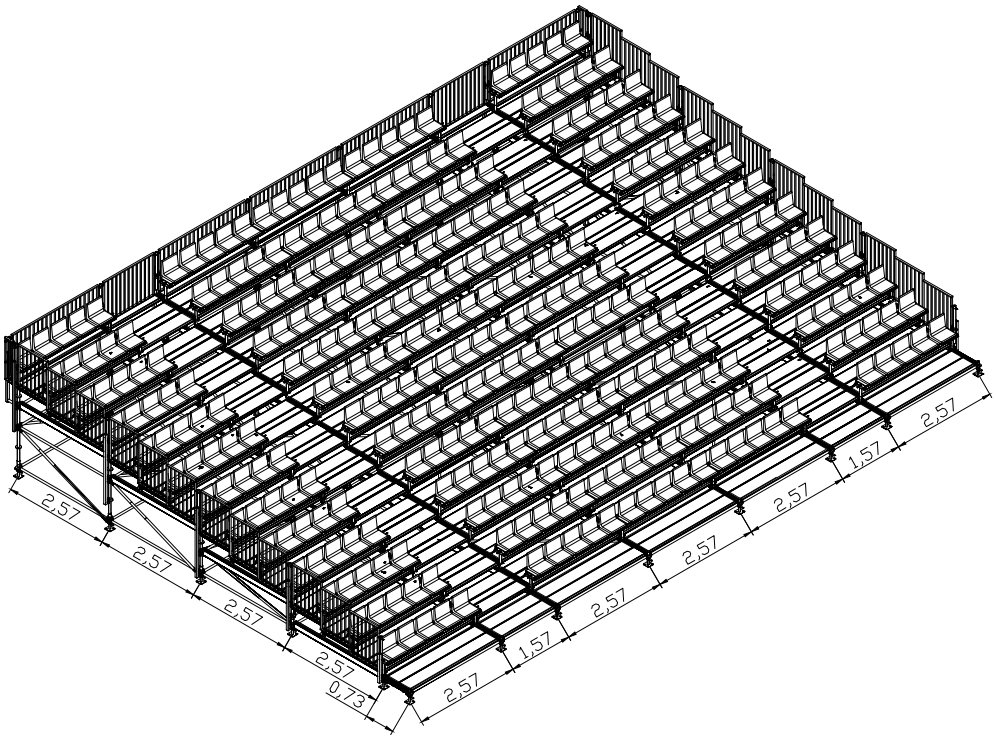


*Altrad Event stand - complete with steel platforms, H = 2 m*

## 9. Altrad event stand - complete with steel platforms

| No. | COMPONENT NAME | SYMBOL | STAND HEIGHT [m] (fixed stand width: 5 x 2.57 m + 2 x 1.57 m) | | | | | |
|---|---|---|---|---|---|---|---|---|
| | | | 1.0 | 2.0 | 3.0 | 4.0 | 5.0 | 6.0 |
| 1 | Initial component | E371300 | 16 | 32 | 48 | 64 | 80 | 96 |
| 2 | Stand, 0.5 m | E371405 | 8 | 8 | 8 | 8 | 16 | 8 |
| 3 | Stand, 1.0 m | E371410 | 0 | 8 | 8 | 8 | 8 | 8 |
| 4 | Stand 1.5 m | E371415 | 0 | 8 | 8 | 8 | 8 | 16 |
| 5 | Stand 2.0 m | E371420 | 0 | 0 | 8 | 8 | 8 | 8 |
| 6 | Stand, 2.5 m | E371425 | 0 | 0 | 8 | 8 | 8 | 8 |
| 7 | Stand, 3.0 m | E371430 | 0 | 0 | 0 | 8 | 8 | 8 |
| 8 | Stand, 3.5 m | E371435 | 0 | 0 | 0 | 8 | 8 | 8 |
| 9 | Stand, 4.0 m | E371440 | 0 | 0 | 0 | 0 | 8 | 8 |
| 10 | Horizontal transom, 2.57 m | E371825 | 48 | 107 | 192 | 303 | 440 | 603 |
| 11 | Horizontal transom, 1.57 m | E371815 | 16 | 30 | 48 | 70 | 96 | 126 |
| 12 | Adjustable base jack, 0.4 m | E511204 | 16 | 32 | 48 | 64 | 80 | 96 |
| 13 | Steel platform, 0.32 x 2.57 m | E491325 | 70 | 130 | 190 | 250 | 310 | 370 |
| 14 | Steel platform, 0.32 x 1.57 m | E491315 | 28 | 52 | 76 | 100 | 124 | 148 |
| 15 | Steel platform, 0.19 x 2.57 m | E491825 | 35 | 65 | 95 | 125 | 155 | 185 |
| 16 | Steel platform, 0.19 x 1.57 m | E491815 | 14 | 26 | 38 | 50 | 62 | 74 |
| 17 | Transverse U-transom, 0.73 m | E372407 | 8 | 8 | 8 | 8 | 8 | 8 |
| 18 | Protection wedge | E371800a | 56 | 104 | 152 | 200 | 248 | 296 |
| 19 | Platform protection, 0.73 mm | E374507 | 8 | 8 | 8 | 8 | 8 | 8 |
| 20 | Stepping beam - for load-bearing beam, 2.57 m | E378010 | 16 | 32 | 48 | 64 | 80 | 96 |
| 21 | Load-bearing transom, 2.57 m | E378011 | 16 | 32 | 48 | 64 | 80 | 96 |
| 22 | Seat stand | E378020 | 48 | 96 | 144 | 192 | 240 | 288 |
| 23 | Seat, 0.32 x 2.57 m | E378030 | 35 | 65 | 95 | 125 | 155 | 185 |
| 24 | Protection cotter pin | E511100 | 48 | 96 | 144 | 192 | 240 | 288 |
| 25 | Vertical brace, 2.57 x 1.0 m | E373225 | 0 | 22 | 66 | 132 | 220 | 330 |
| 26 | Vertical brace, 2.57 x 2.57 m | E378040 | 4 | 8 | 12 | 16 | 20 | 24 |
| 27 | Vertical brace, 2.57 x 0.5 m | E378041 | 11 | 11 | 11 | 11 | 11 | 11 |
| 28 | Seat stand, 0.45 m, with initial component | E378021 | 8 | 8 | 8 | 8 | 8 | 8 |
| 29 | Railing post, 1.1 m | E378051 | 2 | 2 | 2 | 2 | 2 | 2 |
| 30 | Railing post, 1.6 m | E378052 | 2 | 2 | 2 | 2 | 2 | 2 |
| 31 | Railing post, 2.1 m | E378053 | 2 | 6 | 10 | 14 | 18 | 22 |
| 32 | Rear railing post, 1.6 m | E378054 | 8 | 8 | 8 | 8 | 8 | 8 |
| 33 | Stepping railing, 2.57 m | E378060 | 4 | 8 | 12 | 16 | 20 | 24 |
| 34 | Rear railing, 2.57 m | E378061 | 5 | 5 | 5 | 5 | 5 | 5 |
| 35 | Corner railing | E378063 | 2 | 2 | 2 | 2 | 2 | 2 |
| 36 | Steel platform support | E378070 | 16 | 32 | 48 | 64 | 80 | 96 |
| 37 | Initial component, without guiding pipe | E378002 | 8 | 8 | 8 | 8 | 8 | 8 |
| 38 | Platform protection, 0.86 m | E378071 | 48 | 96 | 144 | 192 | 240 | 288 |
| 39 | Steel adjustable base jack, 0.23 m | E378001 | 8 | 8 | 8 | 8 | 8 | 8 |
| 40 | Rear railing, 1.57 m | E378062 | 2 | 2 | 2 | 2 | 2 | 2 |
| 41 | Bucket seat (PCV) | E378035 | 175 | 325 | 475 | 625 | 775 | 925 |
| 42 | Screw, M8x40, with washer and nut | ---------- | 350 | 650 | 950 | 1250 | 1550 | 1850 |
| | | | Used in the covered areas | | | | | |
| | | | Used in the free areas | | | | | |

## 10. Girder effective load capacity

### Table 6. Effective load capacity of aluminium MOSTOSTAL-Plus girders

**Girder fixed to the supports (frames) with 4 normal connectors**

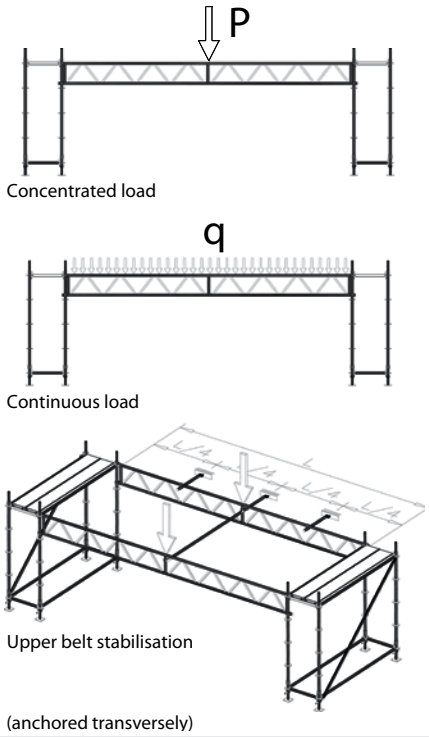


Aluminium girders, 0.4 XL + min. 0.1 m

| Girder supports spacing (bay dimens.) L [m] | Concentrated force F (kN) | Concentrated force F (kN) | | Uniform load q (kN/m) |
|---|---|---|---|---|
| | Loaded with force concentrated in the middle of the bay length. Upper belt stabilised in the middle of the bay length. | Loaded with force concentrated in the middle of the bay length. Upper belt stabilised uniformly every (...) m. | | Loaded uniformly over the entire length of the upper belt. Stabilised with platforms installed over the entire length of the upper belt. |
| 3.07 | 7.5 | 10.9 | (1.02) | 2.87 |
| 4.14 | 5.7 | 10.5 | (1.38) | 2.17 |
| 5.14 | 4.4 | 4.3 | (1.29) | 2.84 |
| 6.14 | 3.5 | 4.3 | (1.54) | 2.29 |
| 8.0 | 2.3 | 6.9 | (1.36) | 1.15 |
| 10.0 | 1.6 | 4.9 | (1.42) | 0.83 |
| 12.0 | 1.5 | 4.1 | (1.5) | 0.51 |

Aluminium girders, 0.5 XL + min. 0.1 m

| Girder supports spacing (bay dimens.) L [m] | Concentrated force F (kN) | Concentrated force F (kN) | | Uniform load q (kN/m) |
|---|---|---|---|---|
| | Loaded with force concentrated in the middle of the bay length. Upper belt stabilised in the middle of the bay length. | Loaded with force concentrated in the middle of the bay length. Upper belt stabilised uniformly every (...) m. | | Loaded uniformly over the entire length of the upper belt. Stabilised with platforms installed over the entire length of the upper belt. |
| 3.07 | 7.66 | 23.13 | (1.02) | 4.15 |
| 4.14 | 5.82 | 14.2 | (1.38) | 2.98 |
| 5.14 | 4.45 | 13.8 | (1.29) | 2.29 |
| 6.14 | 3.49 | 10.93 | (1.54) | 2.09 |
| 8.0 | 2.29 | 7.53 | (1.36) | 1.27 |
| 10.0 | 1.58 | 5.73 | (1.42) | 0.91 |
| 12.0 | 1.15 | 6.13 | (1.5) | 0.6 |

### Table 7. Effective load capacity of steel MOSTOSTAL-Plus girders

**Girder fixed to the supports (frames) with 4 normal connectors**

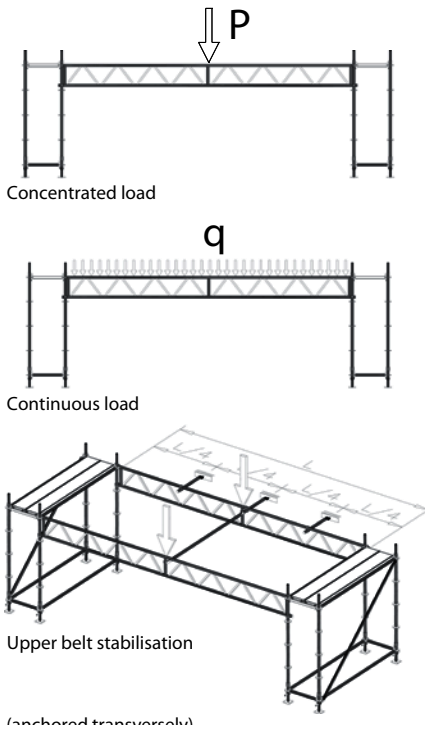


Steel girders, 0.4 XL + min. 0.1 m

| Girder supports spacing (bay dimens.) L [m] | Concentrated force F (kN) | Concentrated force F (kN) | | Uniform load q (kN/m) |
|---|---|---|---|---|
| | Loaded with force concentrated in the middle of the bay length. Upper belt stabilised in the middle of the bay length. | Loaded with force concentrated in the middle of the bay length. Upper belt stabilised uniformly every (...) m. | | Loaded uniformly over the entire length of the upper belt. Stabilised with platforms installed over the entire length of the upper belt. |
| 3.07 | 8.13 | 9.73 | (1.02) | 2.2 |
| 4.14 | 6.61 | 9.0 | (1.38) | 1.69 |
| 5.14 | 5.57 | 8.2 | (1.29) | 2.37 |
| 6.14 | 4.5 | 5.13 | (1.54) | 1.97 |
| 8.0 | 3.05 | 5.53 | (1.36) | 0.8 |
| 10.0 | 2.08 | 3.87 | (1.42) | 0.58 |
| 12.0 | 1.52 | 3.07 | (1.5) | 0.41 |

Steel girders, 0.4 XL + min. 0.1 m

| Girder supports spacing (bay dimens.) L [m] | Concentrated force F (kN) | Concentrated force F (kN) | | Uniform load q (kN/m) |
|---|---|---|---|---|
| | Loaded with force concentrated in the middle of the bay length. Upper belt stabilised in the middle of the bay length. | Loaded with force concentrated in the middle of the bay length. Upper belt stabilised uniformly every (...) m. | | Loaded uniformly over the entire length of the upper belt. Stabilised with platforms installed over the entire length of the upper belt. |
| 3.07 | 8.45 | 9.27 | (1.02) | 2.41 |
| 4.14 | 6.91 | 13.53 | (1.38) | 2.39 |
| 5.14 | 5.59 | 3.27 | (1.29) | 1.47 |
| 6.14 | 4.53 | 10.47 | (1.54) | 1.71 |
| 8.0 | 2.97 | 6.2 | (1.36) | 1.07 |
| 10.0 | 2.09 | 4.67 | (1.42) | 0.69 |
| 12.0 | 1.53 | 3.67 | (1.5) | 0.49 |

## 11. Connector effective loads

**Table 8.**

| No. | Index | Component Name | | Permissible Connector Effective Loads | No | Index | Component Name | | Permissible Connector Effective Loads |
|---|---|---|---|---|---|---|---|---|---|
| 1. | E581119 | Normal connector | 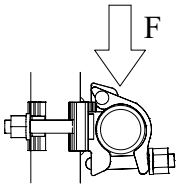 | F≤9.1 kN | 5. | E373900 | Double wedge connector | 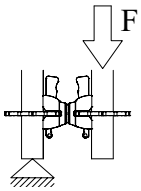 | F ≤ 4.0 kN (other values according to the loads of the Rotax Plus node) |
| 2. | 581320 | Rotating connector | 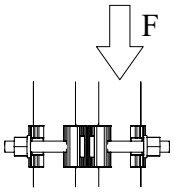 | F≤5.9 kN | 6. | E373901 | Normal wedge connector | 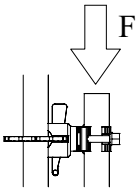 | F≤6.8 kN |
| 3. | E581421 | Longitudinal connector | 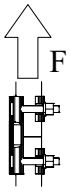 | F≤6.0 kN | 7. | E373001 | Rotating wedge connector | 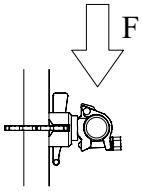 | F≤5.1 kN |
| 4. | E284620 | Clamp connector | 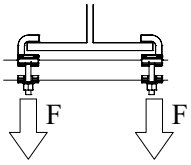 | F≤9.0 kN | 8. | E371200 | Disk connector | 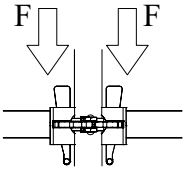 | ∑F≤11.1 kN |

## 12. Platform loads

**Table 9.**

| Platform load class acc. to EN-12 811 | | | | | | | |
|---|---|---|---|---|---|---|---|
| **No.** | **Platform type** | **3.07** | **2.57** | **2.07** | **1.57** | **1.09** | **0.73** |
| 1. | Steel platforms 0.32 E4913xx, 4914xx, 4916xx, 4955xx, 4956xx | 4 kl. (3.0 kN/m$^2$) | 5 kl. (4.5 kN/m$^2$) | 6 kl. (6 kN/m$^2$) | 6 kl. (6 kN/m$^2$) | 6 kl. (6 kN/m$^2$) | 6 kl. (6 kN/m$^2$) |
| 2. | Additional steel platforms 0.19 E491810xx | 6 kl. (6.0 kN/m$^2$) | 6 kl. (6.0 kN/m$^2$) | 6 kl. (6.0 kN/m$^2$) | 6 kl. (6.0 kN/m$^2$) | 6 kl. (6.0 kN/m$^2$) | 6 kl. (6.0 kN/m$^2$) |
| 3. | Alu-plywood platforms 0.61 E4920xx, 4919xx, 4923xx, 4925xx | 3 kl. (2.0 kN/m$^2$) | 3 kl. (2.0 kN/m$^2$) | 3 kl. (2.0 kN/m$^2$) | 3 kl. (2.0 kN/m$^2$) | 3 kl. (2.0 kN/m$^2$) | 3 kl. (2.0 kN/m$^2$) |

| Length - L [m] | | | | | | | |
|---|---|---|---|---|---|---|---|
| **No.** | **Platform type** | **3.00** | **2.50** | **2.00** | **1.50** | **1.00** | **0.70** |
| 4. | Filling platform 0.30 E4943xx | 3 kl. (2.0 kN/m$^2$) | 4 kl. (3.0 kN/m$^2$) | 5 kl. (4.5 kN/m$^2$) | 6 kl. (6.0 kN/m$^2$) | 6 kl. (6.0 kN/m$^2$) | 6 kl. (6.0 kN/m$^2$) |
| 5. | Filling platform 0.19 E4944xx | 4 kl. (3.0 kN/m$^2$) | 5 kl. (4.5 kN/m$^2$) | 6 kl. (6.0 kN/m$^2$) | 6 kl. (6.0 kN/m$^2$) | 6 kl. (6.0 kN/m$^2$) | 6 kl. (6.0 kN/m$^2$) |

## 13. Permissible span for moveable platforms made of wood or planks

**Table 10.**

| Permissible spacing for the moveable platforms made of wood or planks (acc. to tab. 8, DIN 4420, T1) | | | | | | |
|---|---|---|---|---|---|---|
| Loading class | Platform or plank width [cm] | Platform or plank thickness [cm] | | | | |
| | | 3.00 | 3.50 | 4.00 | 4.50 | 5.00 |
| 1, 2, 3 | 20 | 1.25 | 1.50 | 1.75 | 2.25 | 2.50 |
| | 24 i 28 | 1.25 | 1.75 | 2.25 | 2.50 | 2.75 |
| 4 | 20 | 1.25 | 1.50 | 1.75 | 2.25 | 2.50 |
| | 24 i 28 | 1.25 | 1.75 | 2.00 | 2.25 | 2.50 |
| 5 | 20, 24, 28 | 1.25 | 1.25 | 1.50 | 1.75 | 2.00 |
| 6 | 20, 24, 28 | 1.00 | 1.25 | 1.25 | 1.50 | 1.75 |

## 14. Transoms complete with perforated platforms

**Table 11.**

| Transoms complete with perforated platforms | | |
|---|---|---|
| Transom length [m] | Number of platforms | |
| | 0.32 m | 0.19 m |
| 0.45 | 1 | - |
| 0.73 | 2 | - |
| 1.09 | 3 | - |
| 1.57 | 4 | 1 |
| 2.07 | 6 | - |
| 2.57 | 7 | 1 |
| 3.07 | 9 | - |

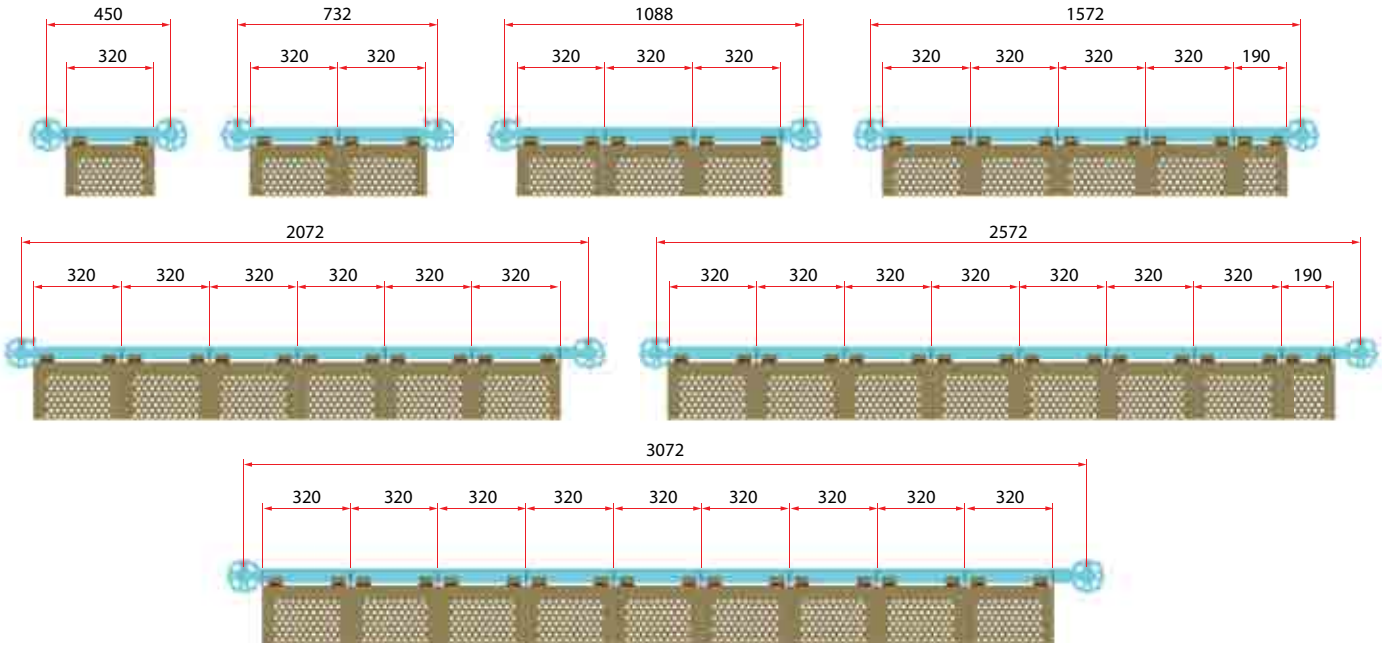

## 15. Adjustable base jack load capacity

**Table 12. Standard base jacks**

| Base jack type | | Permissible nut loosening X [cm] | | | | |
|---|---|---|---|---|---|---|
| | | 20 | 30 | 40 | 50 | 60 |
| E511204 | Permissible vertical load* [**kN**] | 40 | - | - | - | - |
| E511206 | | 40 | 29 | 22 | - | - |
| E511208 | | 40 | 29 | 22 | 17 | 15 |

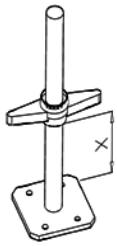


* The values shown include 5% of horizontal forces. By performing appropriate calculations you can use higher effective loads.

**Table 13. Reinforced base jack, 1.5 m**

| Base jack type | | Permissible nut loosening X [cm] | | | | | |
|---|---|---|---|---|---|---|---|
| | | **30**+20 | **30**+30 | **30**+40 | **30**+50 | **30**+60 | **30**+70 |
| E511313 | Permissible vertical load* [**kN**] | 38 | 26 | 20 | 16 | 15 | 13 |

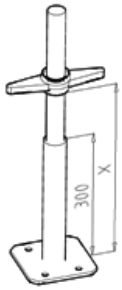


* The values shown include 5% of horizontal forces. By performing appropriate calculations you can use higher effective loads.

## 16. Gate passages

Lattice girders are used to provide passages under the scaffolding. There are two types of solutions. The first solution uses lattice girders with the welded heads (E3767...). The girders are fixed to the stand hole disks at the working platform height according to the figure below. The system platforms are installed on the girders, perpendicularly to the building facade. To add next scaffolding levels you should install the girder pipe connector (E376700) which is the starting point for next stands. The second solution uses lattice girders installed on the outside of the stands with the normal connectors (E581119). The distance between the girder supporting points should be the sum of two system bay lengths (e.g. 2 x 2.57 m). When the span is 6.144 m install the 1.0 m stands in the middle of this length using the normal connectors. Connect the stands with the horizontal transoms and the horizontal U-transom which will support the system platforms (figure below).
When building gate passages of lattice girders you can use them instead of max. two bays. For the scaffolding 20 - 34 m high and 1.09 wide provide additional structure reinforcement above the girder and install the standard pipes 6.0 m long to reinforce the stands in the passage zone.

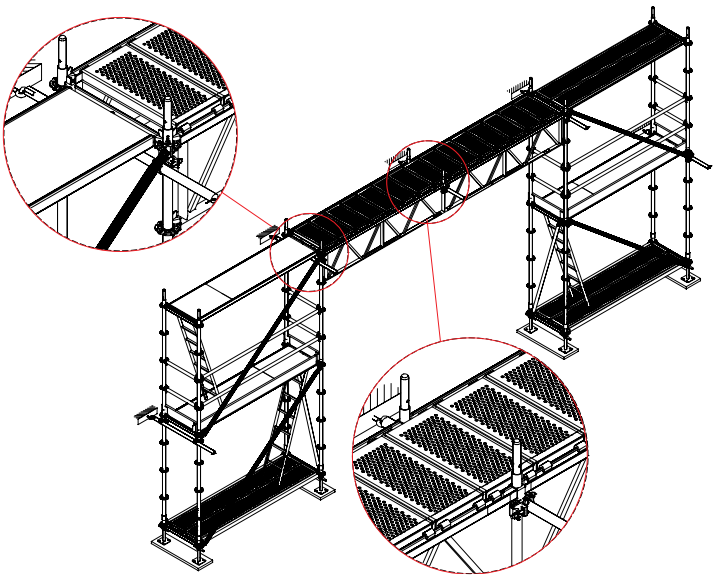

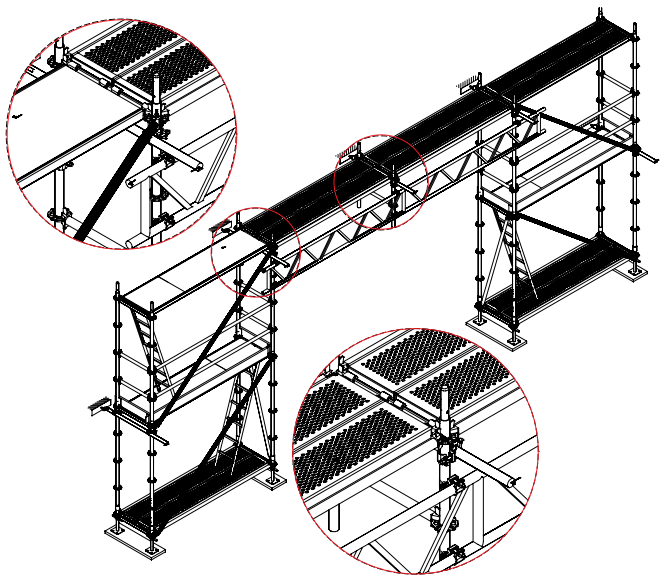

## 17. Aluminium platforms

To facilitate construction works an aluminium platform system has been designed. They act as movable platforms. When laid on the scaffolding or the building structural elements they act as a working platform, ceiling, communication and inspection platforms.

A platform is made of the aluminium sections and skin trapezoidal plate. The system includes also steel auxiliary components which are rust-protected. You can use platforms 4.25 m, 5.2 m, 6.1 m and 7.1 m long and 0.6 wide. The platform load capacity is 2 kN/m2.
When selecting the platform length you should consider the overlap to be kept to properly support the component. For ALTRAD-Mostostal platforms the overlap is at least 400 mm.
Fig. 10.1 presents an example of supporting the aluminium platform on the structure made of the pole scaffoldings.

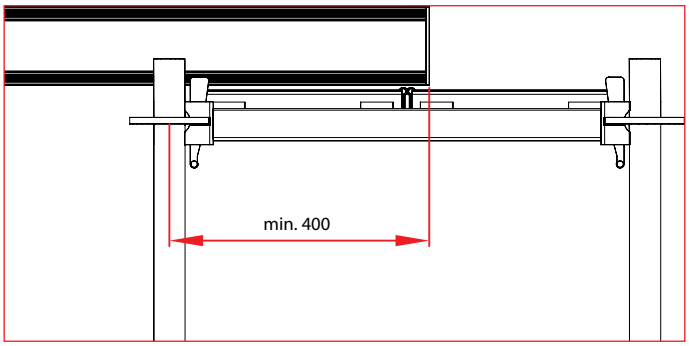


▪ Rysunek 10.1

When several platforms are laid next to each other you should join them with a clamp (E491003). The clamps are installed both on the upper and bottom platform plane (Fig. 10.2). Installation includes fixing the clamp handles on the side sections of the adjacent platforms and clamping the movable clamp parts by driving a wedge (Fig. 10.3).

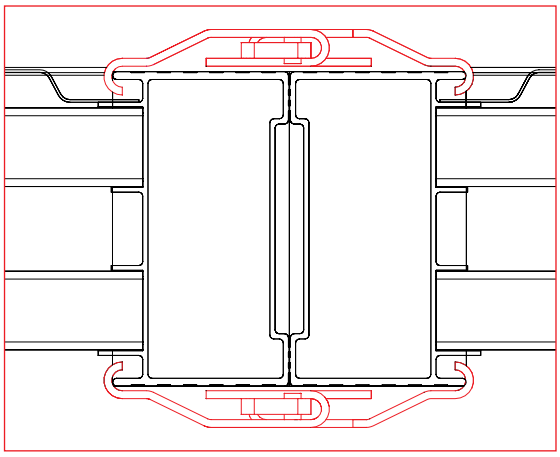

▪ Figure 10.2

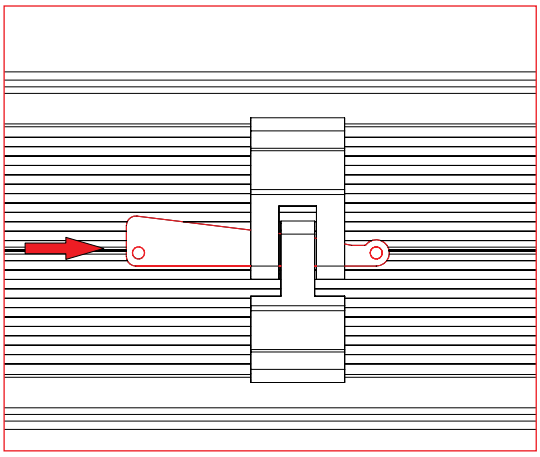

▪ Figure 10.3

To protect the persons on the platform you should install the protective railings. To do this you should use the railing post, railing clamp and standard pipes.

The railing post is installed by clamping its movable part (Fig. 10.4) by driving a wedge (Fig. 10.5).

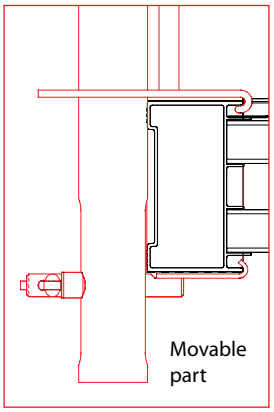


▪ Figure 10.4

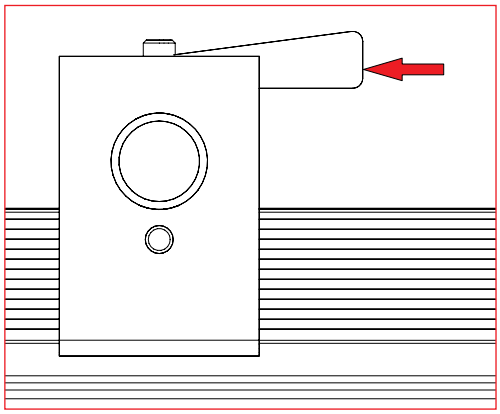

▪ Figure 10.5

By using the railing handle you can fasten the universal pipe to the post to act as a railing. The horizontal pipe is clamped to the vertical pipe with a screw fitted with a handle (Fig. 10.6).

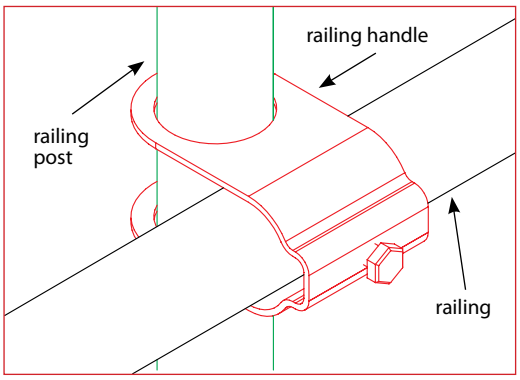


Figure 10.6

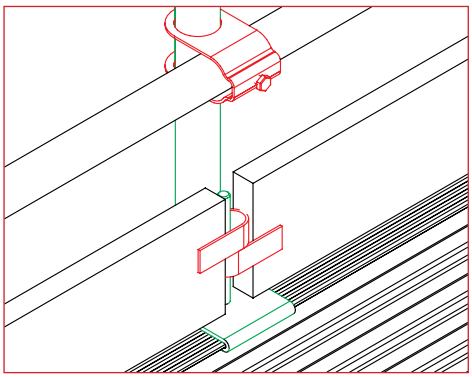

Figure 10.7

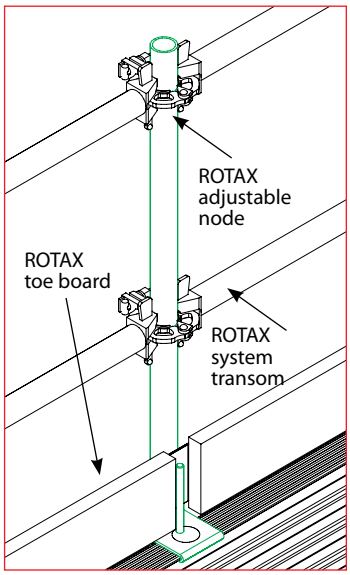


Figure 10.8

The upper railing should be installed 1.0 m over the platform surface.

Alternatively, instead of installing the railings in this manner you can install the standard pipes with the rotating or normal connectors. Join the length of the standard pipes with a longitudinal connector.

The railing posts should be spaced so that you could install the system toe boards. A post allows for installing both the Mostostal Plus system scaffolding toe boards (Fig. 10.7) and the Rotax scaffolding system toe boards.

Spacing the posts at 0.73 m, 1.09 m, 1.57 m, 2.07 m, 2.57 m or 3.07 m is also important when you want to use the Rotax transoms of the system length as the protective railings. However, this solution requires using the additional component - a Rotax adjustable node (E371200) (Fig. 10.8).

Below is a figure presenting an example of the frame scaffolding set-up with the aluminium platforms.

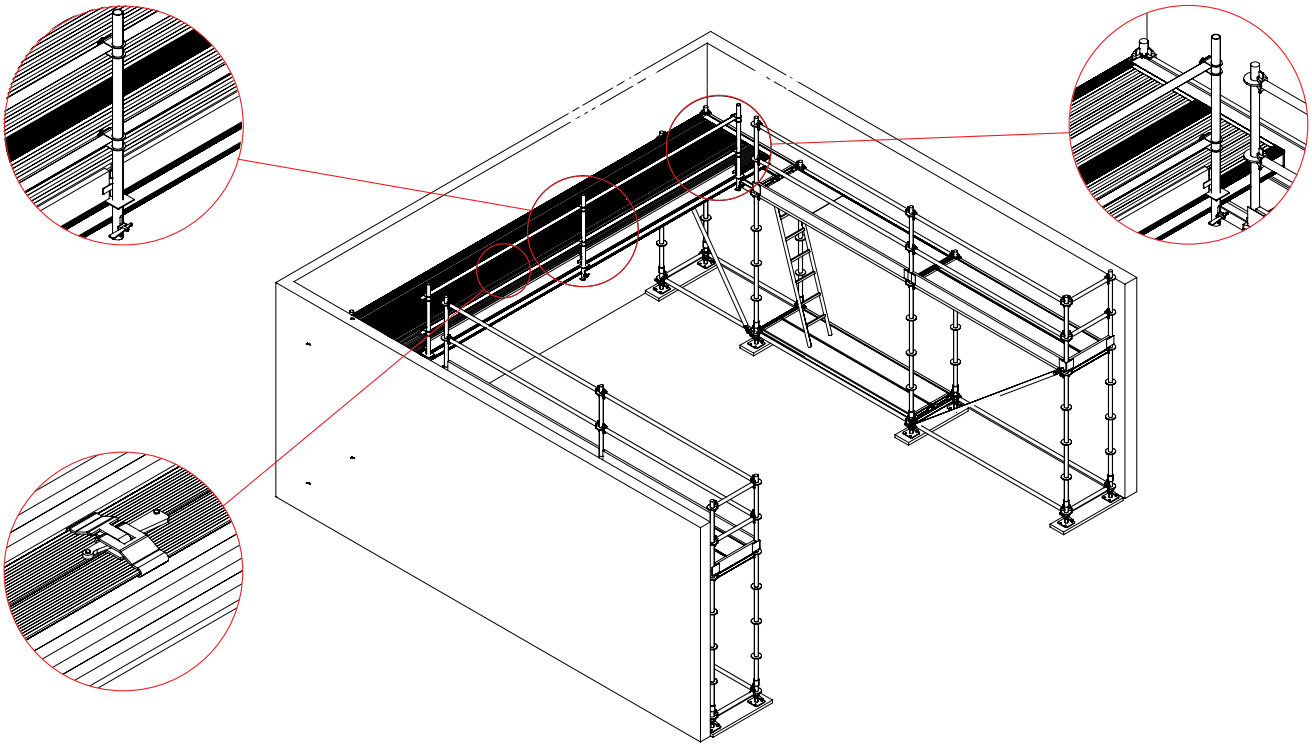

## 18. Wall mobile scaffolding - ROTAX Plus system

| | | | | | | |
|---|---|---|---|---|---|---|
| | Working height [m] | | | 4.53 | 6.53 | 8.53 |
| | Scaffolding height [m] | | | 3.53 | 5.53 | 7.53 |
| | Working platform height [m] | | | 2.53 | 4.53 | 6.53 |
| | No. | COMPONENT NAME | SYMBOL | NUMBER OF COMPONENTS | | |
| MOBILE SCAFFOLDING UNIT | 1. | Mobile scaffolding guide beam | E571173 | 2 | 2 | 2 |
| | 2. | Base jack with two nuts | E571175 | 4 | 4 | 4 |
| | 3. | Road wheel | MP-116 | 4 | 4 | 4 |
| | 4. | Horizontal brace, 2.57 m** | E283825 | 2 | 2 | 2 |
| SCAFFOLDING STRUCTURE | 5. | Standard pipe 4 m | E440540 | - | - | 2 |
| | 6. | Rotating connector | E581319 | - | - | 4 |
| | 7. | Initial component | E371305 | 4 | 4 | 4 |
| | 8. | Stand, 2.0 m | E371420 | 2 | 4 | 6 |
| | 9. | Stand, 1.0 m | E371410 | 4 | 4 | 4 |
| | 10. | Steel platform, 0.32 x 2.57 m* | E491325 | 1 | 1 | 1 |
| | 11. | Complete aluminium and plywood platform, Plus, 2.57 m* | E491925 | 2 | 2 | 2 |
| | 12. | Passing platform, w ladder, Plus, 2.57 m* | E492125 | 1 | 2 | 3 |
| | 13. | Horizontal transom, 2.57* | E371825 | 7 | 13 | 19 |
| | 14. | Horizontal transom, 0.73 m | E371807 | 6 | 10 | 14 |
| | 15. | U-diagonal, 0.73 m | E372407 | 2 | 4 | 6 |
| | 16. | Vertical brace, 2.57 x 2.0 m* | E373125 | 2 | 4 | 6 |
| | 17. | Vertical brace, 0.73 x 2.0 m | E373107 | 2 | 4 | 6 |
| | 18. | Wooden toe board, 2.57 m* | E375125 | 2 | 4 | 6 |
| | 19. | Wooden toe board, 0.73 m | E375107 | 2 | 4 | 6 |
| | 20. | Platform protection, 0.73 m | E374507 | 2 | 4 | 6 |
| | 21. | Protection cotter pin | E511100 | 4 | 8 | 12 |
| | | Ballast for working inside building (pce.) | 1 pce. = 26 kg | - | - | - |
| | | Ballast for working outside building (pce.) | | - | 6 | 8 |

* replacement parts for bay 3.07 m

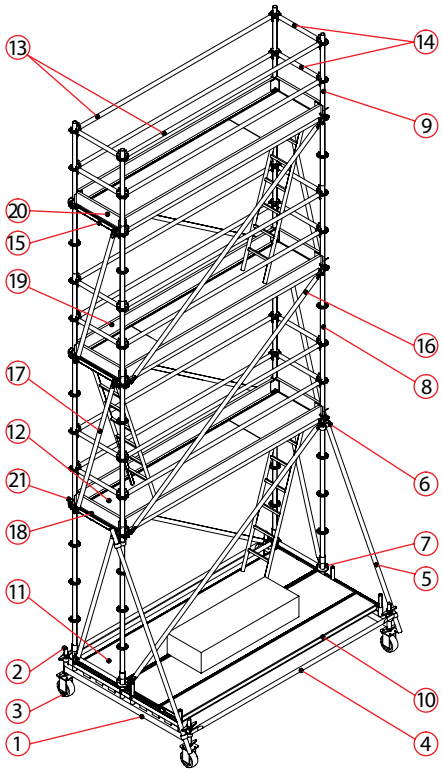

## 19. Ceiling mobile scaffolding - ROTAX Plus system

| | | | | | | | |
|---|---|---|---|---|---|---|---|
| | Working height [m] | | | 4.53 | 6.53 | 8.53 | 10.53 |
| | Scaffolding height [m] | | | 3.53 | 5.53 | 7.53 | 9.53 |
| | Working platform height [m] | | | 2.53 | 4.53 | 6.53 | 8.53 |
| | No. | COMPONENT NAME | SYMBOL | NUMBER OF COMPONENTS | | | |
| MOBILE SCAFFOLDING UNIT | 1. | Mobile scaffolding guide beam | E571173 | 2 | 2 | 2 | 2 |
| | 2. | Base jack with two nuts | E571175 | 4 | 4 | 4 | 4 |
| | 3. | Road wheel | MP-116 | 4 | 4 | 4 | 4 |
| | 4. | Horizontal brace, 2.57 m** | E283825 | 2 | 2 | 2 | 2 |
| SCAFFOLDING STRUCTURE | 5. | Initial component | E371305 | 8 | 8 | 8 | 8 |
| | 6. | Stand, 2.0 m | E371420 | 8 | 16 | 24 | 32 |
| | 7. | Stand, 1.0 m | E371410 | 8 | 8 | 8 | 8 |
| | 8. | Steel platform, 0.32 x 2.57 m* | E491325 | 1 | 1 | 1 | 1 |
| | 9. | Complete aluminium and plywood platform, Plus, 2.57 m* | E491925 | 3 | 4 | 5 | 6 |
| | 10. | Passing platform, with ladder, Plus, 2.57 m* | E492125 | 1 | 2 | 3 | 4 |
| | 11. | Horizontal transom, 2.57* | E371825 | 10 | 18 | 26 | 34 |
| | 12. | Horizontal transom, 0.73 m | E371807 | 12 | 20 | 28 | 36 |
| | 13. | U-diagonal, 0.73 m | E372407 | 4 | 8 | 12 | 16 |
| | 14. | Wedge connection | E373900 | 6 | 8 | 10 | 12 |
| | 15. | Vertical brace, 2.57 x 2.0 m* | E373125 | 2 | 4 | 6 | 8 |
| | 16. | Vertical brace, 0.73 x 2.0 m | E373107 | 4 | 8 | 12 | 16 |
| | 17. | Wooden toe board, 2.57 m* | E375125 | 2 | 4 | 6 | 8 |
| | 18. | Wooden toe board, 0.73 m | E375107 | 4 | 8 | 12 | 16 |
| | 19. | Platform protection, 0.73 m | E374507 | 4 | 8 | 12 | 16 |
| | 20. | Protection cotter pin | E511100 | 8 | 16 | 24 | 32 |
| | | Ballast for working inside building (pce.) | 1 pce. = 26 kg | - | - | - | - |
| | | Ballast for working outside building (pce.) | | - | - | 7 | 2x7 |

* replacement parts for bay 3.07 m

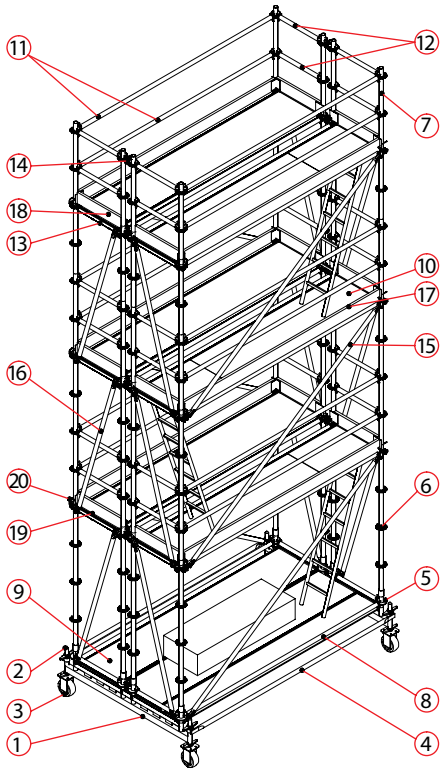

## 20. Free-standing staircase - ROTAX Plus system

| No. | COMPONENT NAME | SYMBOL | STAIRCASE HEIGHT [m] | | | | | | | | | | |
|---|---|---|---|---|---|---|---|---|---|---|---|---|---|
| | | | 4 | 6 | 8 | 10 | 12 | 14 | 16 | 18 | 20 | 22 | 24 |
| 1. | Standard pipe, 3.0 m | E440030 | 2 | 2 | 2 | 2 | 2 | 2 | 2 | 2 | 2 | 2 | 2 |
| 2. | External railing, 2.57 m | E374925 | 1 | 2 | 3 | 4 | 5 | 6 | 7 | 8 | 9 | 10 | 11 |
| 3. | Internal railing | E286300 | 3 | 4 | 5 | 6 | 7 | 8 | 9 | 10 | 11 | 12 | 13 |
| 4. | Railing height | E374800 | 2 | 2 | 2 | 2 | 2 | 2 | 2 | 2 | 2 | 2 | 2 |
| 5. | Aluminium stairs, 2.57 m | E286225 | 2 | 3 | 4 | 5 | 6 | 7 | 8 | 9 | 10 | 11 | 12 |
| 6. | Anchoring connector, with hook, 0.8 m | E286508 | 4 | 6 | 8 | 10 | 12 | 14 | 16 | 18 | 20 | 22 | 24 |
| 7. | Initial component | E371305 | 4 | 4 | 4 | 4 | 4 | 4 | 4 | 4 | 4 | 4 | 4 |
| 8. | Stand, 1.0 m | E371410 | 5 | 5 | 5 | 5 | 5 | 5 | 5 | 5 | 5 | 5 | 5 |
| 9. | Stand, 2.0 m | E371420 | 8 | 12 | 16 | 20 | 24 | 28 | 32 | 36 | 40 | 44 | 48 |
| 10. | Horizontal transom, 1.57 m | E371815 | 9 | 11 | 13 | 15 | 17 | 19 | 21 | 23 | 25 | 27 | 29 |
| 11. | Horizontal transom, 2.57 m | E371825 | 8 | 10 | 12 | 14 | 16 | 18 | 20 | 22 | 24 | 26 | 28 |
| 12. | Vertical brace, 1.57 x 2.0 m | E373115 | 3 | 5 | 7 | 9 | 11 | 13 | 15 | 17 | 19 | 21 | 23 |
| 13. | Vertical brace, 2.57 x 2.0 m | E373125 | 4 | 6 | 8 | 10 | 12 | 14 | 16 | 18 | 20 | 22 | 24 |
| 14. | U-transom, double, 1.57 m | E373515 | 4 | 6 | 8 | 10 | 12 | 14 | 16 | 18 | 20 | 22 | 24 |
| 15. | Platform protection, 1.57 m | E374515 | 4 | 6 | 8 | 10 | 12 | 14 | 16 | 18 | 20 | 22 | 24 |
| 16. | Steel platform, 0.16 x 2.57 m | E491225 | 1 | 2 | 3 | 4 | 5 | 6 | 7 | 8 | 9 | 10 | 11 |
| 17. | Adjustable base jack, 0.8 m | E511208 | 4 | 4 | 4 | 4 | 4 | 4 | 4 | 4 | 4 | 4 | 4 |
| 18. | Normal connector | E581119 | 8 | 10 | 12 | 14 | 16 | 18 | 20 | 22 | 24 | 26 | 28 |
| 19. | Pipe connector | E581701 | 1 | 1 | 1 | 1 | 1 | 1 | 1 | 1 | 1 | 1 | 1 |

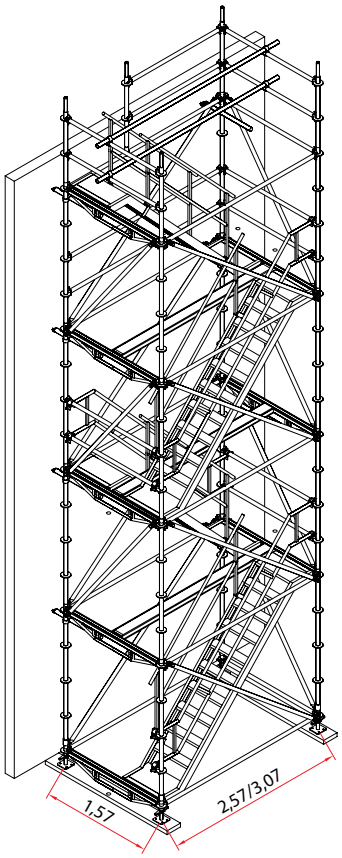

## 21. Free-standing staircase with load-bearing beam - ROTAX Plus system

| No. | COMPONENT NAME | SYMBOL | STAIRCASE HEIGHT [m] | | | | | | | | | | |
|---|---|---|---|---|---|---|---|---|---|---|---|---|---|
| | | | 4 | 6 | 8 | 10 | 12 | 14 | 16 | 18 | 20 | 22 | 24 |
| 1. | Initial component | E371305 | 12 | 12 | 12 | 12 | 12 | 12 | 12 | 12 | 12 | 12 | 12 |
| 2. | Stand, 1.0 m | E371410 | 12 | 12 | 12 | 12 | 12 | 12 | 12 | 12 | 12 | 12 | 12 |
| 3. | Stand, 2.0 m | E371420 | 18 | 30 | 42 | 54 | 66 | 78 | 90 | 102 | 114 | 126 | 138 |
| 4. | Horizontal transom, 1.09 m | E371810 | 47 | 66 | 85 | 104 | 123 | 142 | 161 | 180 | 199 | 218 | 237 |
| 5. | Stairs load-bearing beam, 2.57 x 2.0 m | E377025 | 4 | 6 | 8 | 10 | 12 | 14 | 16 | 18 | 20 | 22 | 24 |
| 6. | Horizontal transom, 2.57 m | E371825 | 2 | 3 | 4 | 5 | 6 | 7 | 8 | 9 | 10 | 11 | 12 |
| 7. | Vertical brace, 2.57 x 2.0 m | E373125 | 8 | 12 | 16 | 20 | 24 | 28 | 32 | 36 | 40 | 44 | 48 |
| 8. | Vertical brace, 1.09 x 2.0 m | E373110 | 11 | 19 | 27 | 35 | 43 | 51 | 59 | 67 | 75 | 83 | 91 |
| 9. | U-diagonal, reinforced, 1.09 m | E372410 | 8 | 11 | 14 | 17 | 20 | 23 | 26 | 29 | 32 | 35 | 38 |
| 10. | Platform protection, 1.09 m | E374510 | 8 | 11 | 14 | 17 | 20 | 23 | 26 | 29 | 32 | 35 | 38 |
| 11. | Steel toe board, 1.09 m | E375110 | 8 | 12 | 16 | 20 | 24 | 28 | 32 | 36 | 40 | 44 | 48 |
| 12. | Steel platform, 1.09 m | E281310 | 35 | 51 | 67 | 83 | 99 | 115 | 131 | 147 | 163 | 179 | 195 |
| 13. | Adjustable base jack, 0.8 m | E511208 | 12 | 12 | 12 | 12 | 12 | 12 | 12 | 12 | 12 | 12 | 12 |
| 14. | Normal connector | E581119 | 10 | 16 | 22 | 28 | 34 | 40 | 46 | 52 | 58 | 64 | 70 |
| 15. | Anchoring connector, with hook, 0.8 m | E286508 | 6 | 10 | 14 | 18 | 22 | 26 | 30 | 34 | 38 | 42 | 46 |
| 16. | Standard pipe, 3.0 m | E440030 | 2 | 3 | 4 | 5 | 6 | 7 | 8 | 9 | 10 | 11 | 12 |

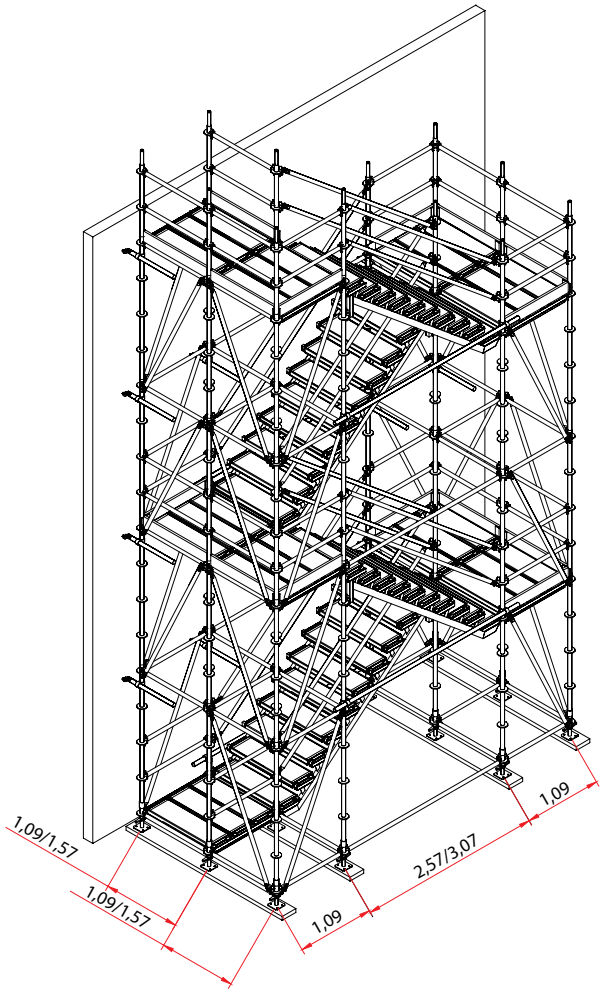

## 22. Staircase at scaffolding - ROTAX Plus system

| No. | COMPONENT NAME | SYMBOL | STAIRCASE HEIGHT [m] | | | | | | | | | | |
|---|---|---|---|---|---|---|---|---|---|---|---|---|---|
| | | | 4 | 6 | 8 | 10 | 12 | 14 | 16 | 18 | 20 | 22 | 24 |
| 1. | External railing, 2.57 m | E374925 | 2 | 3 | 4 | 5 | 6 | 7 | 8 | 9 | 10 | 11 | 12 |
| 2. | Internal railing | E286300 | 2 | 3 | 4 | 5 | 6 | 7 | 8 | 9 | 10 | 11 | 12 |
| 3. | Railing handle | E374800 | 2 | 2 | 2 | 2 | 2 | 2 | 2 | 2 | 2 | 2 | 2 |
| 4. | Aluminium stairs, 2.57 m | E286225 | 2 | 3 | 4 | 5 | 6 | 7 | 8 | 9 | 10 | 11 | 12 |
| 5. | Initial components | E371305 | 2 | 2 | 2 | 2 | 2 | 2 | 2 | 2 | 2 | 2 | 2 |
| 6. | Stand, 1.0 m | E371410 | 2 | 2 | 2 | 2 | 2 | 2 | 2 | 2 | 2 | 2 | 2 |
| 7. | Stand, 2.0 m | E371420 | 4 | 6 | 8 | 10 | 12 | 14 | 16 | 18 | 20 | 22 | 24 |
| 8. | Horizontal transom, 0.73 m | E371807 | 8 | 12 | 16 | 20 | 24 | 28 | 32 | 36 | 40 | 44 | 48 |
| 9. | Horizontal transom, 1.57 m | E371815 | 2 | 2 | 2 | 2 | 2 | 2 | 2 | 2 | 2 | 2 | 2 |
| 10. | Horizontal transom, 2.57 m | E371825 | 3 | 4 | 5 | 6 | 7 | 8 | 9 | 10 | 11 | 12 | 13 |
| 11. | Vertical brace, 2.57 x 2.0 m | E373125 | 2 | 3 | 4 | 5 | 6 | 7 | 8 | 9 | 10 | 11 | 12 |
| 12. | U-diagonal, 0.73 m | E372407 | 4 | 6 | 8 | 10 | 12 | 14 | 16 | 18 | 20 | 22 | 24 |
| 13. | Platform protection, 0.73 m | E374507 | 4 | 6 | 8 | 10 | 12 | 14 | 16 | 18 | 20 | 22 | 24 |
| 14. | Adjustable base jack, 0.8 m | E511208 | 2 | 2 | 2 | 2 | 2 | 2 | 2 | 2 | 2 | 2 | 2 |
| 15. | Wooden toe board, 0.73 m | E375107 | 3 | 5 | 7 | 9 | 11 | 13 | 15 | 17 | 19 | 21 | 23 |
| 16. | Pipe connector | E581701 | 1 | 1 | 1 | 1 | 1 | 1 | 1 | 1 | 1 | 1 | 1 |

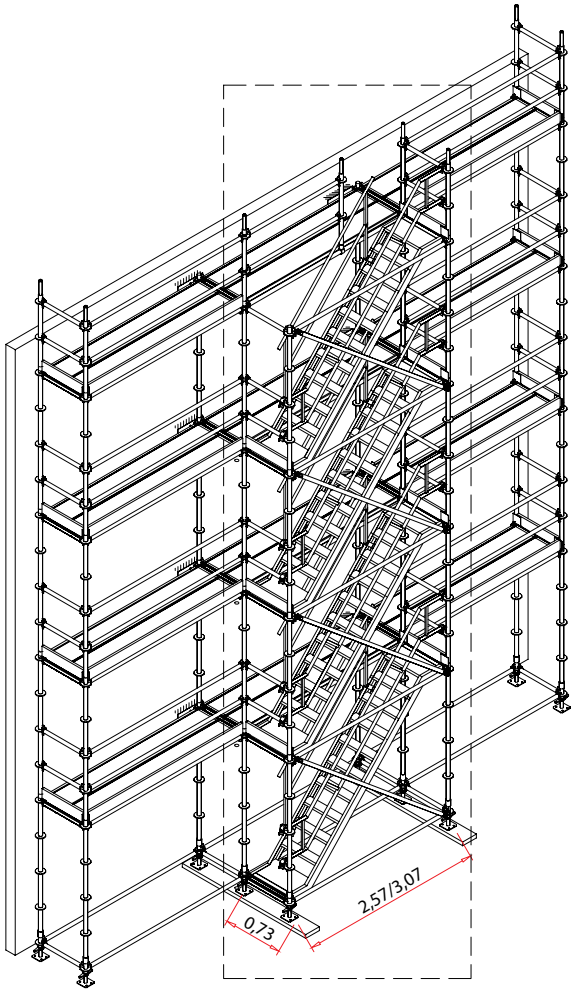

ALTRAD Mostostal

## SCAFFOLDING COMMISSION PROTOCOL

**No. _____ of_____**

**To agreement no._____ of_____**

| | |
|---|---|
| Contractor .....<br>.....<br>.....<br>.....<br>.....<br>.....<br>Authorised person .....<br>Phone no. ..... | User .....<br>.....<br>.....<br>.....<br>.....<br>.....<br>Authorised person .....<br>Phone no. ..... |
| Typ rusztowania:<br>☐ Frame ☐ Wall<br>☐ Rotax modular ☐ Free-standing<br>☐ Mobile ☐ Hanging<br>☐ Facade ☐ ..... | Assembly site .....<br>.....<br>.....<br>.....<br>.....<br>..... |
| Scaffolding parameters:<br>Structure dimensions .....<br>Net dimensions .....<br>Structure load capacity .....<br>Working platform permissible load capacity ..... $kNm^2$<br>..... | Scaffolding purpose .....<br>.....<br>.....<br>.....<br>.....<br>..... |
| Earthing resistance ..... Ω<br>Subsequent inspection dates .....<br>.....<br>.....<br>.....<br>.....<br>..... | Additional equipment .....<br>.....<br>.....<br>.....<br>.....<br>.....<br>.....<br>..... |

Declaration and confirmation

I. Assembly Contractor certifies that the scaffolding described in this protocol is complete. The scaffolding was assembled according to the best construction practices and the assembly manual issued by the manufacturer as well as according to the OHS requirements. The assembly was performed by certified fitters.

2. The scaffolding structure may be modified only by the Assembly Contractor.

3. The Assembly Contractor provides the following along with this protocol:

a) scaffolding scheme

b) scaffolding assembly manual

c) .....

d) .....

4. Scaffolding user accepts this scaffolding for use without any reservations and declares that he/she is aware of the rules of use resulting from the assembly manual.

5. Before each use of the scaffolding the User should check its technical condition and completeness.

6. Commission in the following panel confirms the scaffolding hand-over after assembly and acceptance for use.

a) ..... ..... ..... - User

b) ..... ..... ..... - User

c) ..... ..... ..... - Contractor

full name position signature

Application date for scaffolding disassembly: .....

## Sales partners - map

COMPANIES

SALES PARTNERS

### NORTH EAST REGION

**Katarzyna Goluch** - Technical and Sales Adviser
(Mazowieckie, Podlaskie, Łódzkie, Warmińsko-Mazurskie Provinces)
GSM +48 604 481 381
e-mail: k.goluch@altrad-mostostal.pl

### SOUTH EAST, NORTH WEST REGION

**Jacek Goss** - Regional Sales Manager
(Lubelskie, Świętokrzyskie, Małopolskie, Podkarpackie, Śląskie, Lubuskie, Zachodniopomorskie Provinces)
GSM +48 602 578 860
e-mail: j.goss@altrad-mostostal.pl

### CENTRAL AND NORTHERN, SOUTH WEST REGION

**Jarosław Sawicki** - Regional Sales Manager
(Pomorskie, Kujawsko-Pomorskie, Wielkopolskie, Dolnośląskie, Opolskie Provinces Provinces)
GSM +48 602 578 861
e-mail: j.sawicki@altrad-mostostal.pl

### RENTING:

- **Altrad Mostostal Montaż Sp. z o.o.** (Siedlce)
  GSM 694 461 182
- **Altrad - Prymat Sp. z o.o.** (Dzierżoniów)
  GSM 608 383 497
- **Altrad - Końskie Sp. z o.o.** (Końskie)
  GSM 608 362 364
- **Altrad - Pomorze Sp. z o.o.** (Szczecin)
  GSM 601 711 584

### SALES PARTNERS:

- **ARAD Sp. z o.o. Sp. k.** (Wrocław)
  Tel. No. 71 364 52 39
- **BPM Sp. z o.o.** (Białystok)
  GSM 606 118 224
- **Chrabąszcz Rusztowania Witold Chrabąszcz** (Toruń)
  GSM 601 851 426
- **F.H.U. Fasadextar Piotr Poniewierski** (Tarnów)
  GSM 602 130 409
- **F.H.U. Protech Tomasz Niedziela** (Rybnik)
  GSM 604 970 874
- **Interpetro Sp. z o.o.** (Rzeszów)
  GSM 602 341 502
- **Ostap P.U.P.H. Marian Ostapowicz** (Warsaw)
  GSM 501 204 546
- **P.P.U. Capital Sp. z o.o.** (Gdańsk)
  GSM 512 418 028
- **P.P.U.H. Adept Robert Mazurkiewicz** (Konin)
  GSM 607 620 512
- **Pro-Men Sp. z o.o.** (Lublin)
  GSM 500 002 083
- **P.U.H. Oreno Leszek Drill** (Bydgoszcz)
  GSM 604 441 630
- **Slabak Sławomir Bakalarz** (Łódź)
  GSM 695 581 240

**ALTRAD-Mostostal Spółka z o.o.**
**ul. Starzyńskiego 1, 08-110 Siedlce**
**Phone No. +48 25 644 72 84, fax +48 25 633 32 78**
**e-mail: handlowy@altrad-mostostal.pl**